www.etek-electric.com

SOLAR PV SYSTEM

Always for your safety

ZHEJIANG ETEK
ELECTRICAL TECHNOLOGY CO.,LTD.

Always for your safety

COMPANY INTRODUCTION

Zhejiang ETEK Electric Technology Co., Ltd. (Abbreviation: ETEK Electric) is a professional manufacturing company dedicated to the research, development, production and sales of low-voltage electrical appliances. The company was established in 2011 and is located in Wenzhou City, Zhejiang Province. At present, the company has a modern factory building of more than 12,000 mm^2. ETEK Electric focuses on the low-voltage electrical fieldwide and has advanced production management systems and production processes. Its products cover electrical safety products for household, commercial, industrial and similar facilities, such as Miniature Circuit Breakers (MCB), Residual Current Devices (RCD), Isolating Switches, Molded Case Circuit Breakers (MCCB), Distribution Board, AC Contactors, Surge Protectors (SPD), IoT Smart Circuit Breakers and Electric Vehicle Charging Facilities (EV Charger), etc.

Relying on hard work and innovation, ETEK Electric's products quickly stand out in the fiercely competitive electrical market. With its own brand 'ETEK', it has successfully entered the international market and signed overseas brand agency contracts with customers from many countries and regions. Its products are exported to the Europe, Middle East, Africa, South Asia and other more than 60 countries and regions.

ETEK Electric always insists on providing customers with safe and reliable electrical products. Won approvals of CE, CB, TUV, UKCA, SEMKO, VDE, SAA and ISO9001 Quality System Certificate and RoHS Environmental Management System Certificate.

ETEK Electric is committed to solving the pressure and challenges of customers and creating value for customers. ETEK Electric has rich industry experience and a dynamic, professional and efficient team, we can provide customers with the best OEM, ODM services.

Growth, Efficiency, Innovation and Quality are ETEK's business goals. We are firmly committed to the field of low voltage electrical products which is your trusted partner.

We hope our products can guarantee the power safety of global users and promote the development of green energy.

Wenzhou Factory

Wuhu Factory

WORKSHOPS

TESTING CENTER

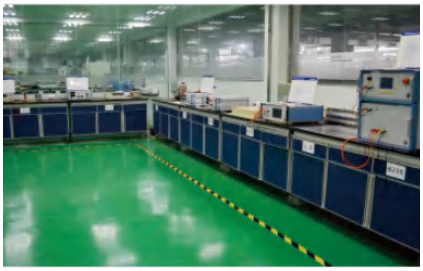

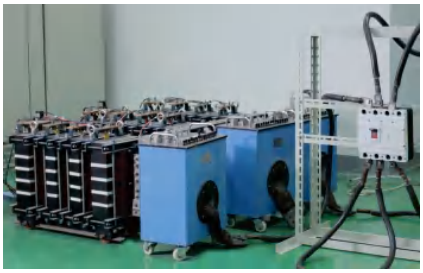

CONTENTS

EKM1-63DC 6KA DC MCB Mini Circuit Breaker 01

EKM1-125DC 10KA DC MCB Mini Circuit Breaker 02

MCB Main Technical Parameters 03

EKM6 DC MCCB High Voltage Molded Case Circuit Breaker 04-16

EKU5-T2-40PV SPD Type T2 17-18

EKU5-T1+T2-40PV SPD Type T1+T2 19-20

Base for PV System 21-23

EKD6-DB32 Enclosure DC Isolator 24-25

EKD6-DC32 Enclosure DC Isolator 26-27

EKD6-DC32R Enclosure DC Isolator 28-29

EKD6-PM32 Enclosure DC Isolator 30-31

EKD6-PM32R Enclosure DC Isolator 32-33

EKD6-EL32R Enclosure DC Isolator 34-36

EKDBPV Combiner Box 37-43

EKDB3 PC/ABS Distribution Box 44-47

EKDB4 Distribution Box 48

EKDB5 Plastic Sealed Box 49-52

AC-PG Waterproof Cable Gland 53

AC-M Waterproof Cable Gland 54

PV-LTM4(1000V)/PV-LTM4-1(1000V) Solar Connector 55

PV-LTM01(1000V)/PV-LTM01-1(1000V) Solar Connector 56

DC MCB EKM1-63DC

Mini Circuit Breaker ---------- Standard_ IEC60947-2

Technical Data

Standard	IEC/EN60947-2
Protection	Overcurrent and short circuit
Type of trip	Thermo-magnetic
No.of poles	1P,2P,4P
Rated currents In	1,2,3,4,5,6,10,16,20,25,32,40,50,63A
Rated voltage Ue	1P(250VDC),2P(500VDC),4P(1000VDC)
Rated breaking capacity	6,000A
Rated impulse withstandard voltage(1.5/50) Uimp	4,000V
Dielectric test voltage at Ind. Freq.for 1 min	3kV
Thermal release characteristic	(1.05-1.30) x In
Magnetic release characteristic	10In±20%
Electrical life	4,000 Cycles
Mechanical life	10,000 Cycles
Contact position indicator	Yes
Protection degree	IP20
Ambient temperature	-5°C to +40°C Max.95%humidity
Terminal connection type	Cable/Pin-type busbar/Fork-type busbar
Max.terminal size for cable	25mm^2
Max.tightening torque	2.5N.m
Installation	Mounting on 35mm DIN rail
Connection	According to the wiring diagram

Overall and Installation Dimension(mm)

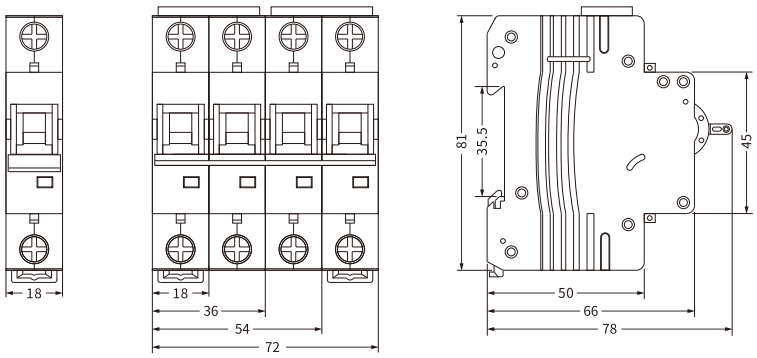

DC MCB EKM1-125DC

Mini Circuit Breaker ---------- Standard_ IEC60947-2

Technical Data

Standard	IEC/EN60947-2
Protection	Overcurrent and short circuit
Type of trip	Thermo-magnetic
No.of poles	1P,2P,4P
Rated currents In	80,100,125A
Rated voltage Ue	1P(250VDC),2P(500VDC),4P(1000VDC)
Rated breaking capacity	10,000A
Rated impulse withstandard voltage(1.5/50) Uimp	4,000V
Dielectric test voltage at Ind. Freq.for 1 min	3kV
Thermal release characteristic	(1.05-1.30) x In
Magnetic release characteristic	10In±20%
Electrical life	4,000 Cycles
Mechanical life	10,000 Cycles
Contact position indicator	Yes
Protection degree	IP20
Ambient temperature	-5°C to +40°C Max.95%humidity
Terminal connection type	Cable/Pin-type busbar/Fork-type busbar
Max.terminal size for cable	35mm^2
Max.tightening torque	2.5N.m
Installation	Mounting on 35mm DIN rail
Connection	According to the wiring diagram

Overall and Installation Dimension(mm)

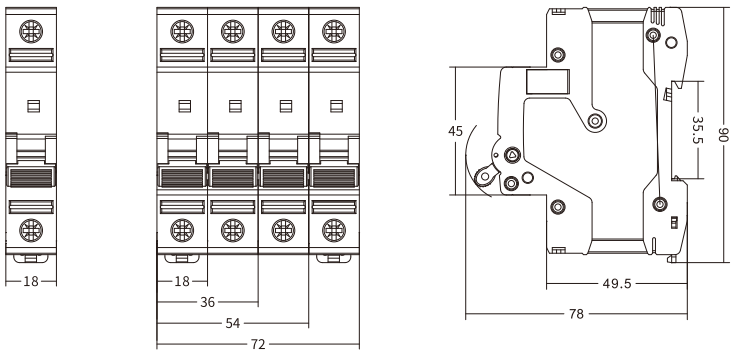

Tripping Characteristic (IEC60947-2)

Current(A)		Rated current (A)	Thermal Release				Magnetic release	
			Non-tripping current(A)	Tripping current(A)	Non-tripping time(h)	Tripping time(h)	Holding time(S)	Tripping time(S)
10In± 20%	8In	1-63	1.05In		≤1		≤0.2	
				1.30In		<1		<0.2
	12In	80-125	1.05In		≤2		≤0.2	
				1.30In		<2		<0.2

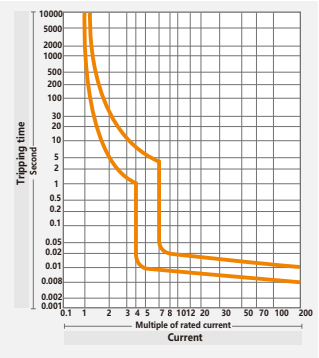

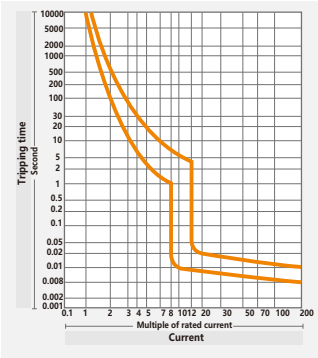

Temperature Derating Table

Rated current (A)	Correction factor for ambient temperature											
	-40℃	-30℃	-20℃	-10℃	0℃	10℃	20℃	30℃	40℃	50℃	60℃	70℃
1	1.33	1.29	1.25	1.2	1.15	1.11	1.05	1	0.94	0.88	0.82	0.75
2	2.67	2.58	2.49	2.4	2.31	2.21	2.11	2	1.89	1.76	1.63	1.49
3	4	3.9	3.7	3.6	3.5	3.3	3.2	3	2.8	2.6	2.4	2.2
4	5.3	5.2	5	4.8	4.6	4.4	4.2	4	3.8	3.5	3.3	3
5	6.7	6.5	6.31	6.1	5.8	5.5	5.25	5	4.7	4.3	4	3.7
6	8	7.7	7.5	7.2	6.9	6.6	6.3	6	5.7	5.3	4.9	4.5
10	13.3	12.9	12.5	12	11.5	11.1	10.5	10	9.4	8.8	8.2	7.5
16	21.3	20.7	20	19.2	18.5	17.7	16.9	16	15.1	14.1	13.1	11.9
20	26.7	25.8	24.9	24	23.1	22.1	21.1	20	18.9	17.6	16.3	14.9
25	33.3	32.3	31.2	30	28.9	27.6	26.4	25	23.6	22	20.4	18.6
32	42.7	41.3	39.9	38.5	37	35.4	33.7	32	30.2	28.2	26.1	23.9
40	53.3	51.6	49.9	48.1	46.2	44.2	42.2	40	37.7	35.3	32.7	29.8
50	66.7	64.5	62.4	60.1	57.7	55.3	52.7	50	47.1	44.1	40.8	37.3
63	84	81.3	78.6	75.7	72.7	69.6	66.4	63	59.4	55.6	51.4	47
80	106.4	103.2	100	96	92	88.8	84	80	75.2	70.4	65.6	60
100	133	129	125	120	115	111	105	100	94	88	82	75
125	166.3	161.3	156.3	150	143.8	138.8	131.3	125	117.5	110	102.5	93.8

Circuit Diagram

- EKM1-63DC
- EKM1-125DC

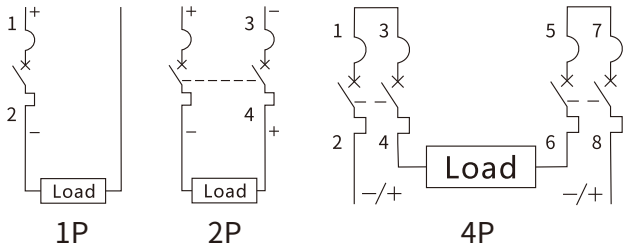

EKM6 DC MCCB

DC High Voltage Molded Case Circuit Breaker

Standard_ IEC60947-1
IEC60947-2

Function Introduction

Through many years of dedicated research on the actual system operation situation and customer needs of new energy at home and abroad, ETEK Electric has developed the EKM6 DC series DC Molded Circuit Breaker for New Energy.

Product Characteristic

- EKM6DC series Molded Circuit Breaker, The maximum rated voltage is DC 1500V, and the maximum current is 800A.
- EKM6 DC series Molded Circuit Breaker, in the voltage of DC 1500V, the maximum breaking capacity is 50kA, which can ensure reliable short-circuit protection of the system.

Standard

EKM6 DC series DC molded case circuit breaker meet the following standards
IEC 60947-1 General Provisions
IEC 60947-2 Circuit Breaker

Use and Maintenance

Various characteristics and accessories of the circuit breaker shall be fixed by the manufacturer and shall not be adjusted in the use. Under the compliance with custody and use conditions, from the date of 24 months from the manufacturer delivery and in the situation of the circuit breaker intact seals, if the product is damaged or not used normally due to manufacturing quality problems, the manufacturer shall be responsible for replacement and repair without charge.

Applied Environment

1. The altitude is not higher than 5500 m;
2. It is resistant to damp air (three-proof type)①
3. It is resistant to the influence of salt fog and oil fog (three - proof type);
4. It is resistant to the influence of mold (three - proof type);
5. In a medium without explosion risk, and the medium is not enough to corrode the metal and destroy the insulation of the gas and conductive dust.

Note: The three-prevention products should be specially customized, please indicate TH.

High operating voltage

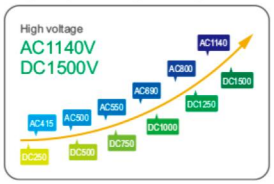

High breaking capacity

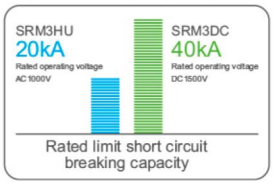

High range applications

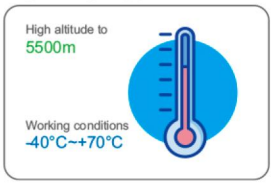

EKM6

DC High Voltage Molded Case Circuit Breaker

Standard_ IEC60947-1
IEC60947-2

Model Preparation Meaning

EK	M	6	DC	-	250	H·R	/	3	300	D	DC1500V	200A
①	②	③	④		⑤	⑥		⑦	⑧	⑨	⑩	⑪

Code name	Meaning
①	ETEK
②	Molded Case
③	Design No.
④	DC-DC
⑤	Shell frame gradecurrent 250, 320, 400, 630, 800
⑥	Rated short-circuit breaking capacity rating H: high speed breaker R: current limiting type
⑦	Phase No.
⑧	Stripper mode and attachment code (see Table)
⑨	External accessories D: Auto operation Z: Manual operation
⑩	Rated voltage DC250V, DC500V, DC750V, DC1000V, DC1250V, DC1500V
⑪	Rated current: 63~800A

Class

According to operation mode:

1. Direct operation
2. Electric operator mechanism operation
3. Rotary handle operation

According to the protection form:

1. Line protection
2. Line isolation

EKM6

DC High Voltage Molded Case Circuit Breaker

Standard_ IEC60947-1
IEC60947-2

Main Technical Parameter

Appearance								
Model		EKM6DC-320			EKM6DC-400			
Rated current of shell frame grade Inm(A)		320			400			
Rated current In(A)		63, 80, 100, 125, 140, 160, 180, 200, 225, 250, 280, 315, 320			225, 250, 315, 350, 400			
Pole Number		2		3	2			3
Rated working voltage Ue (V)DC		500	1000	1500	250/500	750/1000	1250/1500	1250/1500
Rated insulation voltage Ui (V)		1250		1500	1500			
Rated impulse withstand voltage Uimp (kV)		8		12	12			
Extreme short-circuit breaking capacity Icu (kA)	H Type	50	20	20	70	40	20	20 ① 40 ②
	R Type	/	/	/	85	60	40	40 ① 50 ②
Running short-circuit breaking capacity Ics (kA)	H Type	Ics=100%Icu						
	R Type							
Wiring mode		Up incoming and Down outcoming, Down incoming and Up outcoming (2P, 320/3P) Down incoming and Down outcoming, Up incoming and Up outcoming (3P)						
Mechanical life (Total times)		20000			10000			
Electrical life (Total times)		3000	2000	1500	1000	1000	700	500
Insolation feature		Yes						
Standard		IEC 60947-2, GB/T 14048.2						
Allowable ambient temperature		-40~+70°C						
Levels of protection		IP20						
Quality certificate		CCC、CB、TÜV certificate						
With accessories		Auxiliary, alarm, off load, Hand operation, Electric operation						
Arcing distance (mm)		≤50 (Zero arc, with arcing cover)						
Transient Action value		10In						
Overall dimensions L×W×H(mm) 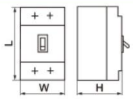	L	180		180	250			250
	W	76		107	124			182
	H	126		126	165			165

Note: ① 2P connection in series
② 3P connection in series

EKM6

DC High Voltage Molded Case Circuit Breaker

Standard_ IEC60947-1
IEC60947-2

Appearance									
Model		EKM6DC-630				EKM6DC-800			
Rated current of shell frame grade Inm(A)		630				800			
Rated current In(A)		500 630				700 800			
Pole Number		2			3	2			3
Rated working voltage Ue (V)DC		250/500	750/1000	1250/1500	1250/1500	250/500	750/1000	1250/1500	1250/1500
Rated insulation voltage Ui (V)		1500				1500			
Rated impulse withstand voltage Uimp (kV)		12				12			
Extreme short-circuit breaking capacity Icu (kA)	H Type	70	40	20	20① 40②	70	40	20	20① 40②
	R Type	85	60	40	40① 50②	85	60	40	40① 50②
Running short-circuit breaking capacity Ics (kA)	H Type	Ics=100%Icu							
	R Type								
Wiring mode		Up incoming and Down outcoming, Down incoming and Up outcoming (2P, 320/3P) Down incoming and Down outcoming, Up incoming and Up outcoming (3P)							
Mechanical life (Total times)		5000							
Electrical life (Total times)		1000	1000	700	500	1000	1000	700	500
Insolation feature		Yes							
Standard		IEC 60947-2, GB/T 14048.2							
Allowable ambient temperature		-40~+70°C							
Levels of protection		IP20							
Quality certificate		CCC、CB、TÜV certificate							
With accessories		Auxiliary, alarm, off load, Hand operation, Electric operation							
Arcing distance (mm)		≤50 (Zero arc, with arcing cover)							
Transient Action value		10In							
Overall dimensions L×W×H(mm) 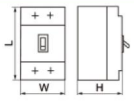	L	250			250	250			250
	W	124			182	124			182
	H	165			165	165			165

Note: ① 2P connection in series
② 3P connection in series

Action Characteristic Curve of The Circuit Breaker

EKM6 Action characteristic curve

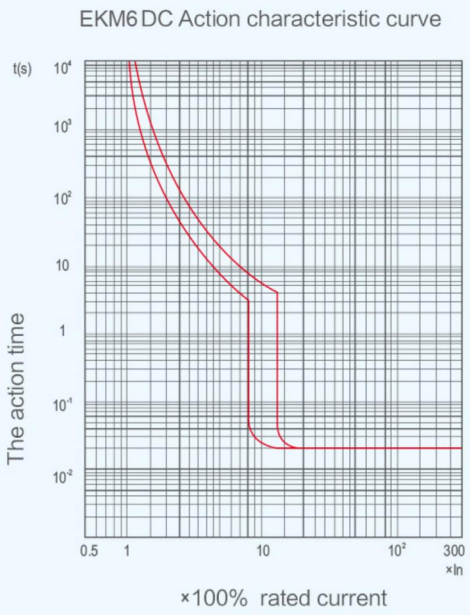

Safe Distance During Circuit Breaker Installation

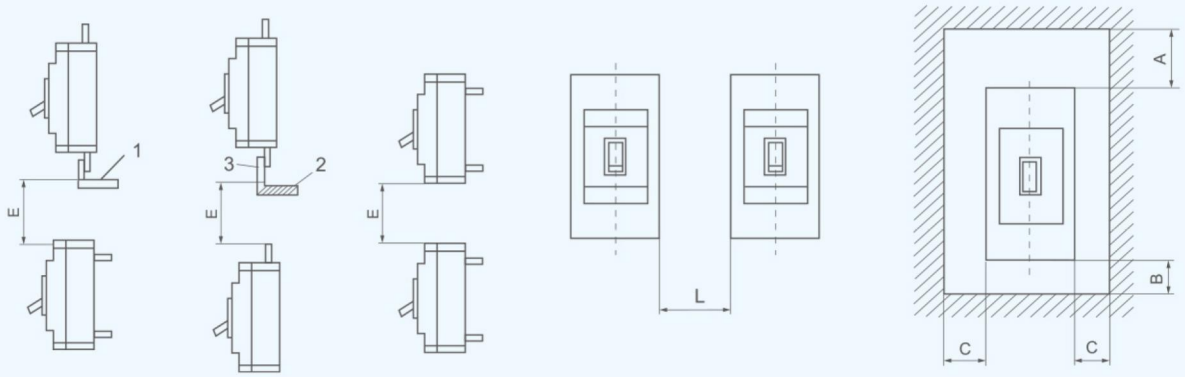

Type	L	A		B	C	E	
		Without zero arcing cover	With zero arcing cover			Without zero arcing cover	With zero arcing cover
EKM6-250	40	50	/	25	25	50	/
EKM6-320		50	65	25	25	50	130
EKM6-400	70	100	65	25	25	100	130
EKM6-630		100	65	25	25	100	130
EKM6-800		100	65	25	25	100	130

In above picture, there is 1. No insulated links 2. Insulated wires 3. Cable terminals

Release Way and Accessory Code

Types according to tripping type: instantaneous buckle only (electromagnetic buckle: 200); hot moving + electromagnetic buckle (composite: 300)

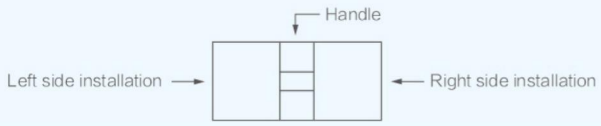

□ Alarm contact
■ Auxiliary contacts
● Shunt release
○ under voltage release
→ Lead line direction

Accessory code	Accessory name	EKM6-250/320	EKM6-(400-800)	EKM6DC250/320	EKM6DC-(400-800)
		3, 4 pole		2, 3 pole	4 pole
200, 300	Without inner accessory	—	—	—	—
208, 308	Alarm Contact	←□	←□	—	←□
210, 310	Shunt release	●→	●→	—	●→
220,320	Auxiliary contact (1NO1NC)	←■		←■	
	Auxiliary contact (2NO2NC)	—	←■	—	←■
202, 302	Auxiliary contact (2NO2NC)	←■	—	—	—
230, 330	Under voltage releas	←○→	←○→	—	←○→
240, 340	Shunt release, Auxiliary contact (1NO1NC)	←■●	—	←■●→	—
	Shunt release, Auxiliary contact (2NO2NC)	—	←■●→	—	←■●→
212, 312	Shunt release, Auxiliary contact (2NO2NC)	←■●→	—	—	—
250, 350	Shunt Release, Under voltage contact	←○●→	←○●→	—	←○●→
260, 360	Group 2 auxiliary contact (2NO2NC)	←■■→	—	—	—
	Group 2 auxiliary contact (4NO4NC)	—	←■■→	—	←■■→
222, 322	Group 2 auxiliary contact (3NO3NC)	←■■→	—	—	—
223, 323	Group 2 auxiliary contact (4NO4NC)	←■■→	—	—	—
270, 370	Under Voltage Release, Auxiliary contact(1NO1NC)	←○■→	—	—	—
	Under Voltage Release, Auxiliary contact (2NO2NC)	—	←○■→	—	←○■→
232, 332	Under Voltage Release, Auxiliary contact (2NO2NC)	←○■→	—	—	—
218, 318	Shunt release Alarm Contact	←□●→	←□●→	—	←□●→
228, 328	Auxiliary contact (1NO1NC), Alarm Contact	←□■→	—	—	—
	Auxiliary contact (1NO1NC), Alarm Contact	—	←□■→	—	←□■→
238, 338	Under voltage releas, Alarm Contact	←○□→	←○□→	—	←○□→
248, 348	Shunt release Auxiliary contact (1NO1NC), Alarm Contact	←□■●	—	—	—
	Shunt release Auxiliary contact (2NO2NC), Alarm Contact	—	←□■●	—	←□■●
268, 368	Group 2 auxiliary contact (2NO2NC), Alarm Contact	←■□■	—	—	—
	Group 2 auxiliary contact (4NO4NC), Alarm Contact	—	←■□■	—	←■□■
205, 305	Group 2 auxiliary contact (3NO3NC), Alarm Contact	←■□■	—	—	—
278, 378	Group 2 auxiliary contact (1NO1NC), Under voltage releas, Alarm Contact	←○■□	—	—	—
	Group 2 auxiliary contact (2NO2NC), Under voltage releas, Alarm Contact	—	←○■□	—	←○■□

Auxiliary Contact

Auxiliary contact current parameters

Rated current of shell frame class	Agreed heating current	Rated operating current at AC 400V
Inm<250	3A	0.30A
Inm>400	6A	0.40A

Auxiliary contact and its combination

When the circuit breaker is in the "off" positio	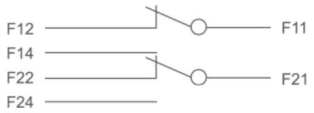
	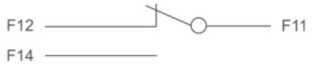
When the circuit breaker is in the “on” position	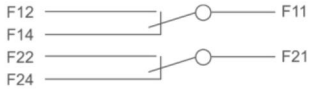

Alarm Contact

Alarm contact and its combination

Alarm Contact Ue= 220V,Ith=3A	
When the circuit breaker is the “off” and “ on” positions	
When the circuit breaker is in the "free trip" position	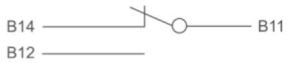

Product Accessories

1. Ontology
2. Undervoltage release (customer purchase)
3. Shunt release (customer purchase)
4. Alarm contact (customer purchase)
5. Auxiliary contact (customer purchase)
6. Electric operating mechanism (customer purchase)
7. Hand-operated mechanism (customer purchase)
8. Terminal guard (customer purchase)
9. Front wiring board (customer option)
10. Arc partition (standard with the main body)

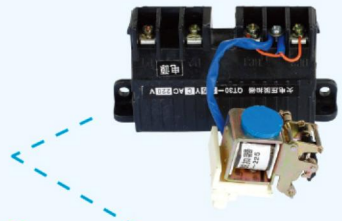

②

⑥

④

⑧
①
⑤
⑦
⑨
③
⑩
ETEK
EKM6DC-320H
Ue(V)
Icu/Ics(kA)
1000
20/20
In
320A
Ui
1250V
Uimp
8kV
Cat A
+40°C
IEC/EN 60947-2
PUSH TO TRIP

Shunt Release

Generally installed in the circuit breaker A phase, and between 70% -110% of the rated control power supply voltage, the distributor shall reliably buckle the circuit breaker under all operating conditions.

Control voltage: General: DC 24V, 100V, 220V

Note: when the control circuit power supply is DC24V, it is recommended to use the following figure for the excitation control circuit design.

KA: is a DC24V intermediate relay with a contact current capacity of 1A.

The micro switch in series between the K: tap and the coil is normally closed contact. When the circuit breaker is disconnected, the contact is disconnected by itself and closed when closed.

Wiring diagram of excitation tripping

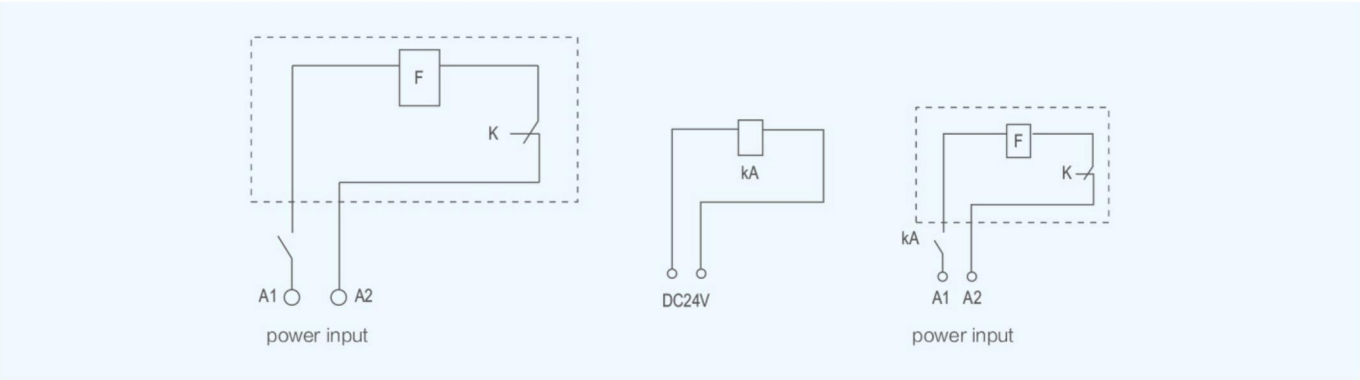

Installation Method and Overall Dimension of External Accessories

Turning the operating handle mechanism type and specification

Model	installation dimension (mm)				Operator handle relative to circuit breaker center value (mm)
	A	B	H	D	
CZ2-320/EKM6	157	35	55	50-150	0
CZ2-400/EKM6	224	48	78	50-150	±5

Schematic of CS1-A handle

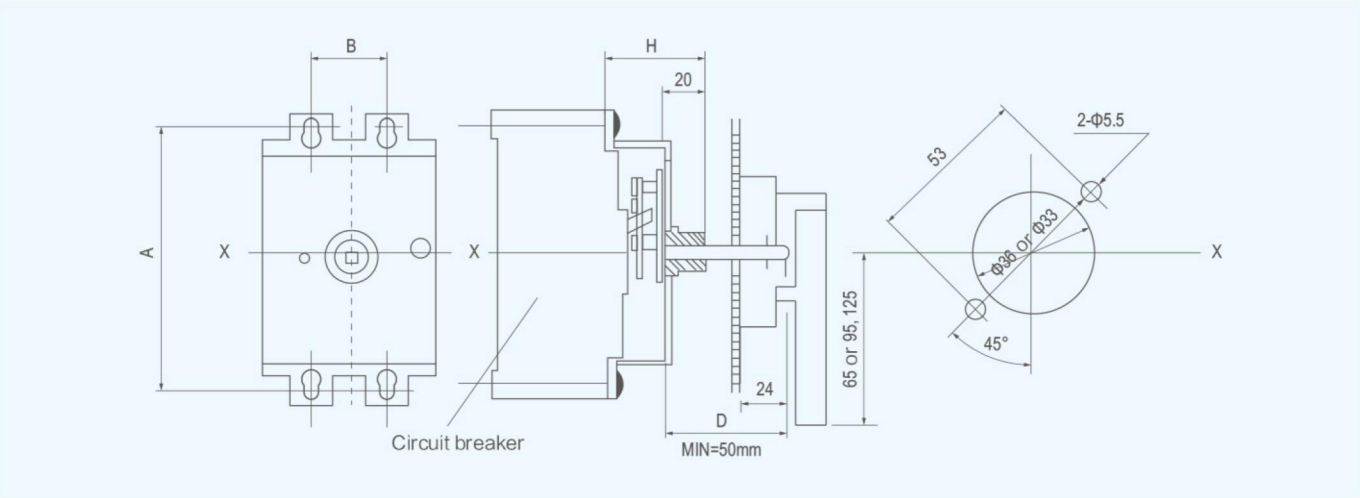

Model and specification of electric operating mechanism

Model	H	B	B1	A	A1	D
EKM6-320	188.5	116	126	90	35	4.2
EKM6-400	244	176	194	130	48	6.5

CD2 Outline and installation dimensions schematic diagram

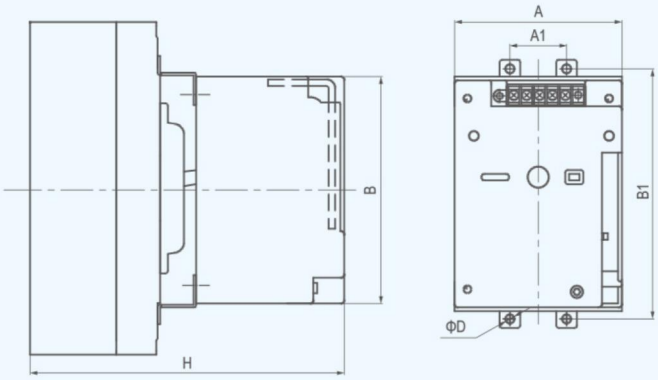

Electric power operator mechanism wiring diagram

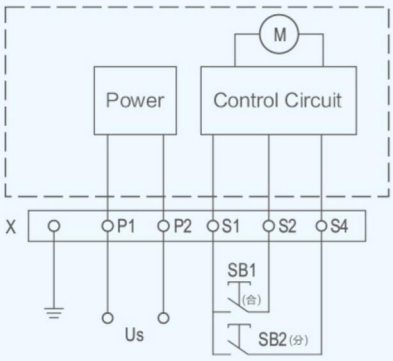

Symbol Description:

SB1,SB2 operation button (user-owned)

X terminal row

P1, P2 Power Supply for External Supply

Outline and Installation Dimension Method and Its Overall Dimension

EKM6DC-250/320 Outline and installation of hole opening dimensions

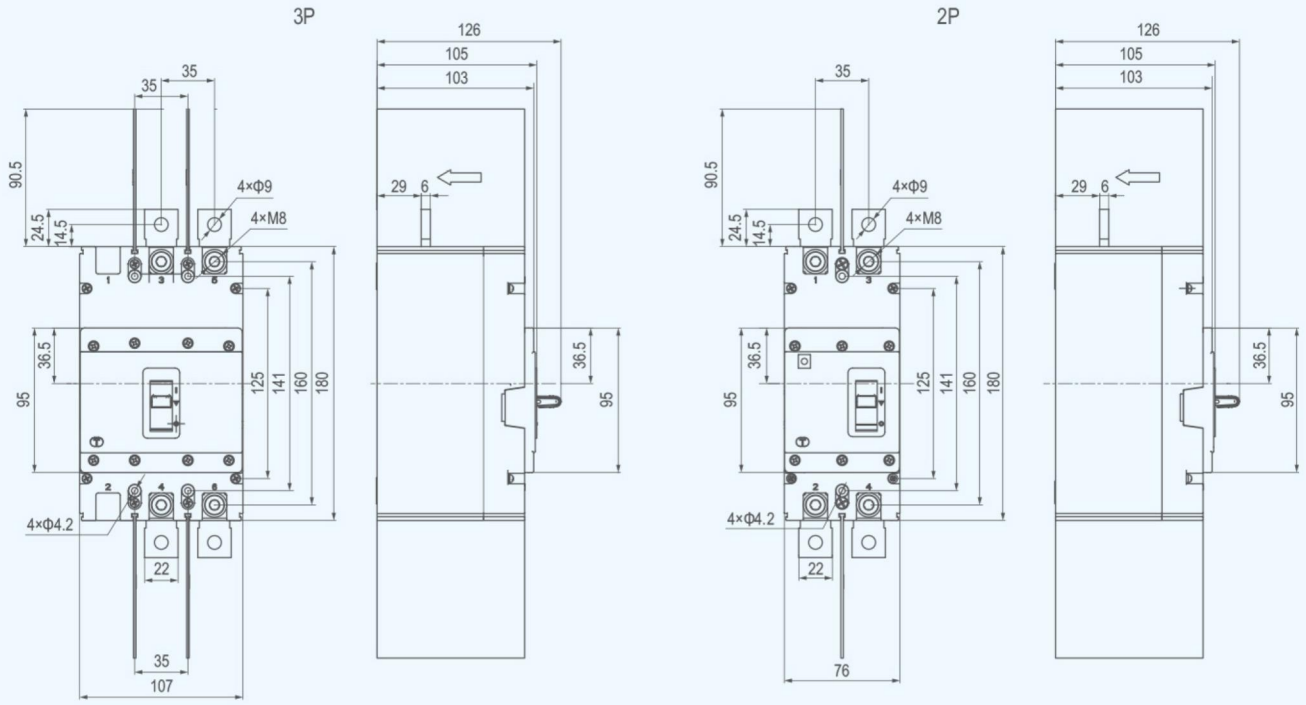

EKM6DC-400/630/800 Outline and installation of hole opening dimensions (2P)

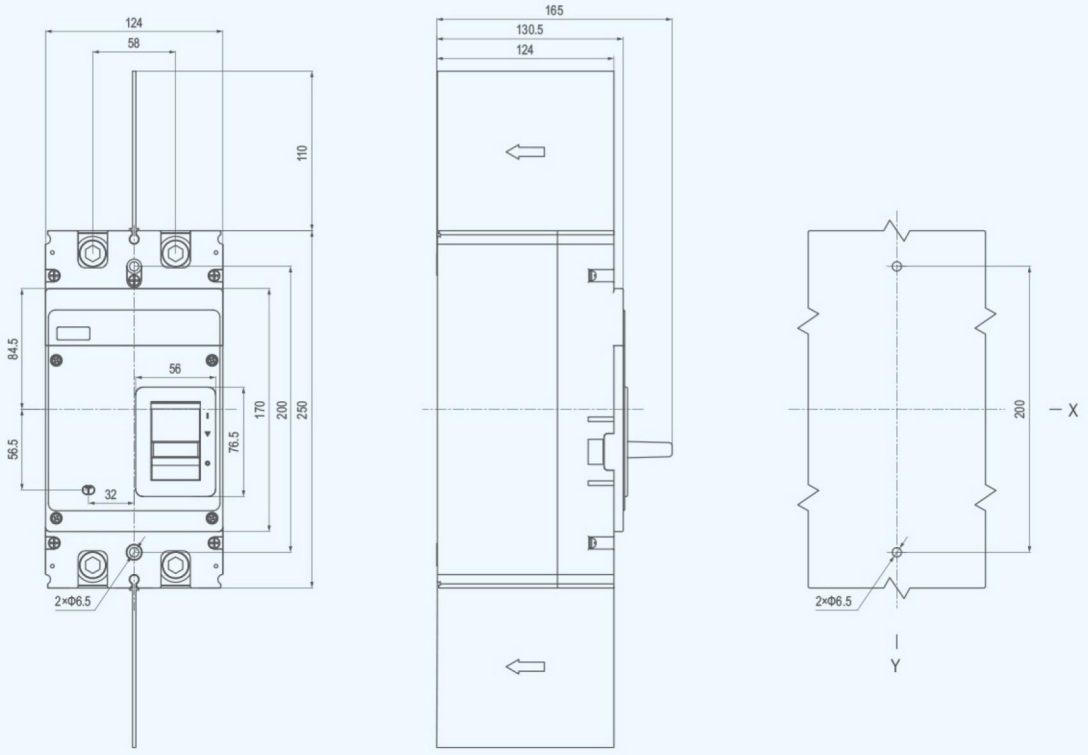

EKM6DC-400/630/800 Outline and installation of hole opening dimensions (3P)

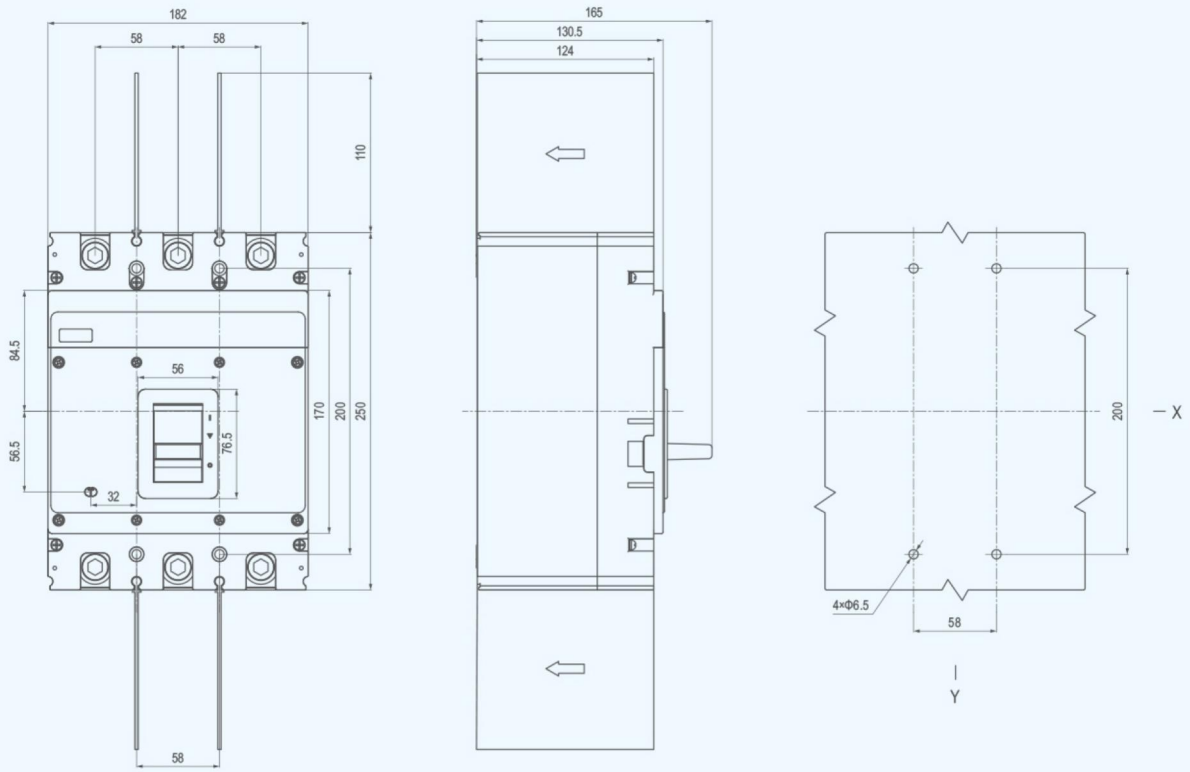

EKM6 with arc cover installation drawing

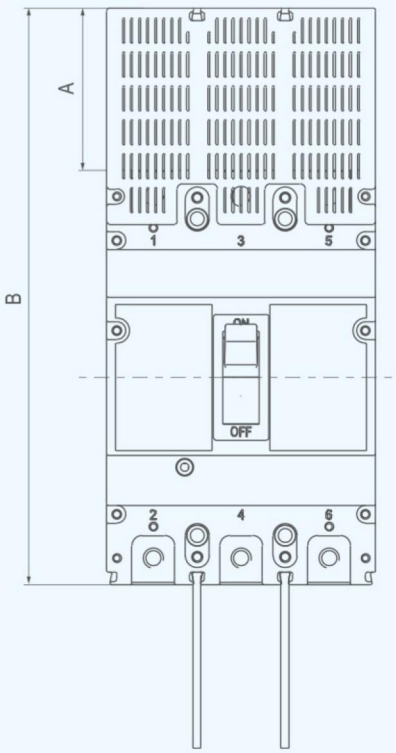

Circuit breaker	Arcing cover length: A	Total length : B
EKM6-320	64	245
EKM6-400/630/800	64	314

Product Selection Guide

EK U5 - T2 - 40 PV - 2M - 600 S

- S: With Remote Signaling
- 600: Uc: 600: DC600V, 1000: DC1000V, 1500: DC1500V
- 2M: No. of Module: 2:2Module, 3:3Module
- PV: Solar PV System
- 40: I.max: 40kA
- T2: Classification T2
- U5: SPD serie No.5
- EK: Company Code

EKU5-T2-40PV
2P(600VDC)

EKU5-T2-40PV
2P(1000VDC)

EKU5-T2-40PV
3P(1000VDC)

EKU5-T2-40PV
3P(1500VDC)

Basic circuit diagram

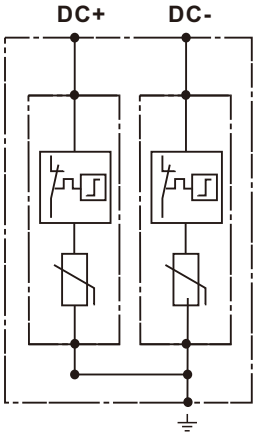

2P

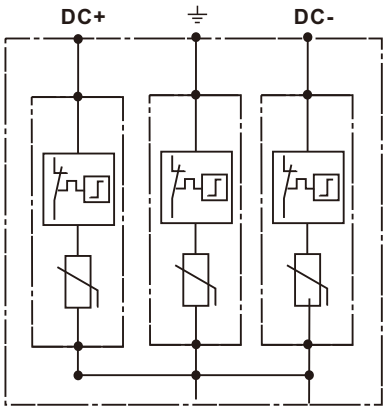

3P

EKU5-T2-40PV SPD Type T2

Standard_ IEC/EN61643-31

SPD Type Reference List

No. of Poles	Max. Continuous Operating DC Voltage		
	600VDC	1000VDC	1500VDC
2Module	EKU5-T2-40PV-2M600	EKU5-T2-40PV-2M1000	-
3Module	-	EKU5-T2-40PV-3M1000	EKU5-T2-40PV-3M1500
With Remote Signaling			
2Module	EKU5-T2-40PV-2M600S	EKU5-T2-40PV-2M1000S	-
3Module	-	EKU5-T2-40PV-3M1000S	EKU5-T2-40PV-3M1500S

Technical Data

SPD classification according to IEC/EN61643-31			T2	T2	T2
Max. continuous operating a.c.voltage	Ucpv		600VDC	1000VDC	1500VDC
Norminal discharge current (8/20μs)	In		20kA	20kA	20kA
Maximum discharge current (8/20μs)	Imax		40kA	40kA	40kA
Voltage protection level DC+/DV-to PE	Up	2Mods	⩽2.6kV	⩽4.0kV	-
		3Mods	-	⩽4.0kV	⩽5.2kV
Response time	tA		⩽25ns	⩽25ns	⩽25ns
Operating temperature range	Tu		-40°C~80°C		
Operating State/Fault Indication			Green/Red		
Cross-section area (Min.)			4mm²		
Cross-section area (Max.)			35mm²		
For mounting on			35mm Din rail		
Enclosure material			Thermal Plastic UL94-V0		
Degree of Protection			IP20		
No. of Moudles			2P(2Mods),3P(3Mods)		

Overall and Installation Dimension(mm)

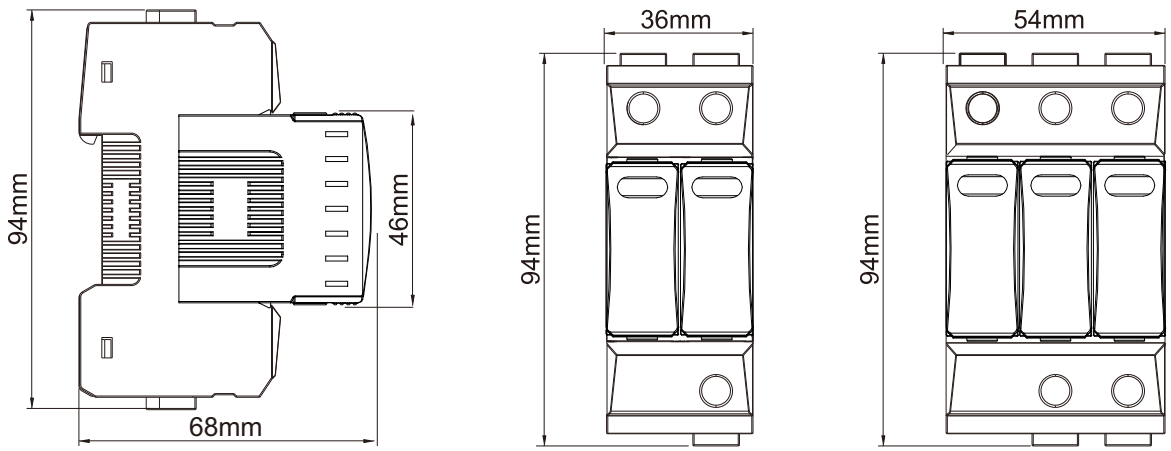

EKU5-T1+T2-40PV SPD Type T1+T2

Standard_ IEC/EN61643-31

EKU5-T1+T2-40PV
3P(1500VDC)

Product Selection Guide

EK U5 - T1+T2 40 PV - 3M - 1500 S

- S: With Remote Signaling
- 1500: Uc: 1500: DC1500V
- 3M: No. of Module: 3:3Module
- PV: Solar PV System
- 40: I.max: 40kA
- T1+T2: Classification T1+T2
- U5: SPD serie No.5
- EK: Company Code

Technical Data

SPD classification according to IEC/EN61643-31			T1+T2
Max. continuous operating a.c.voltage	Ucpv		1500VDC
Impulse Discharge Current (10/350 µs)	Iimp		6.25kA
Total Discharge Current (10/350 µs)	ITotal		12.5kA
Norminal discharge current (8/20µs)	In		20kA
Maximum discharge current (8/20µs)	Imax		40kA
Voltage protection level DC+/DV-to PE	Up	3Mods	≤5.2kV
Response time	tA		≤25ns
Operating temperature range	Tu		-40°C~80°C
Operating State/Fault Indication			Green/Red
Cross-section area (Min.)			4mm²
Cross-section area (Max.)			35mm²
For mounting on			35mm Din rail
Enclosure material			Thermal Plastic UL94-V0
Degree of Protection			IP20
No. of Moudles			3P(3Mods)

SPD Type Reference List

No. of Poles	Max. Continuous Operating DC Voltage
	1500VDC
3Module	EKU5-T1+T2-40PV-3M1500
With Remote Signaling	
3Module	EKU5-T1+T2-40PV-3M1500S

Basic circuit diagram

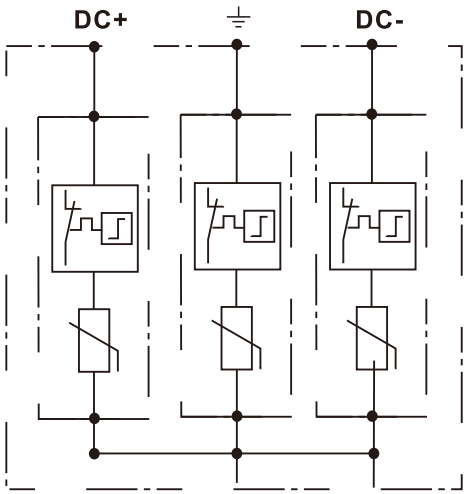

3P

Connection Diagram

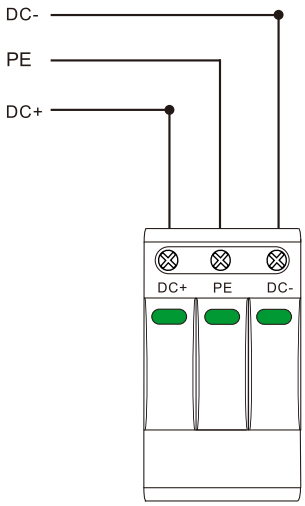

EKU5-T1-T2-40PV

Overall and Installation Dimension(mm)

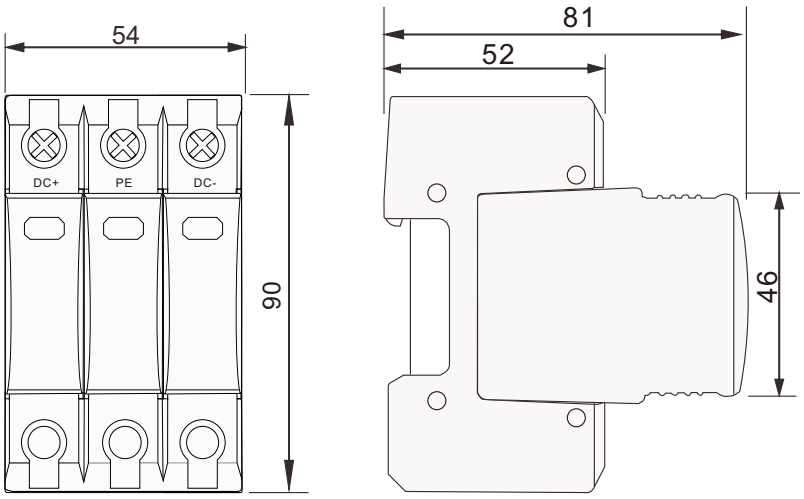

Technical Data

Model				
	EKF1-10PV-10 EKF1-10XPV-10	EKF1-10PVH-10 EKF1-10XPVH-10	EKF1-15PV-10L	EKF1-15PV-14L
Rated Voltage	1000VDC		1500VDC	
Rated Current	32A		32A	50A
Size of Fuse Link	10x38mm		10x85mm	14x85mm
Class of Operation	gPV		gPV	
Mechanical Life	500		500	
Product Width	18mm		22mm	
Tightening Torque	2.5Nm 14In-lbs		2.5Nm 14In-lbs	
Terminal size for Cable	6mm^2 8-18AWG		10mm^2 6-18AWG	
Ambient temperature (with daily average≤35°C)	-5°C~+40°C			
Storage Temperature	-25°C~+70°C			
Standard:	IEC60269-6			
Mounting	On DIN rail EN60715(35mm) by means of fast clip device			

Product Selection Guide

EKF1-10(X)PV-10	
EK	Company Code
F	Fuse Base
1	Design No.
10	DC Voltage Grade (10: 1000VDC, 15: 1500VDC)
X	Blank: Without Lamp, X : With Lamp
PV	For Solar DC system, PV: General type, PVH: High enclosurer type (for EKF1-10PVH-10 new type only)
10	Fitting to Size of Fuse link (10: for 10x38mm 1000V, 10L: for 10x85mm 1500V, 14L: for 14x85mm 1500V)

Reference No.	DC Voltage Grade	Size of Fuse Link	Current Ratting for Fuse Link
EKF1-10(X)PV-10	1000VDC	10x38mm	1,2,3,4,5,6,8,10,12,15,16,20,25,30,32A
EKF1-10(X)PVH-10	1000VDC	10x38mm	1,2,3,4,5,6,8,10,12,15,16,20,25,30,32A
EKF1-15PV-10L	1500VDC	10x85mm	2,3,4,5,6,8,10,12,15,16,20,25,30,32A
EKF1-15PV-14L	1500VDC	14x85mm	8,10,12,15,16,20,25,30,32,35,40,45,50A

Technical Data

Model			
	EKFL10D10	EKFL15D10L	EKFL15D14L
Size	10x38mm	10x85mm	14x85mm
Rated Voltage	1000VDC	1500VDC	1500VDC
Rated Current	1-32A	2-32A	8-50A
Class of Operation	gPV	gPV	gPV
Breaking capacity	20KA	20KA	20KA
Standard:	IEC60269		

Product Selection Guide

EKFL-10D10L16	
EK	Company Code
FL	Fuse Link
10	DC Voltage Grade (10:1000VDC,15:1500VDC)
D	For Solar DC system
10L	Size of Fuse link (10: 10x38mm 1000V, 10L: 10x85mm 1500V, 14L: 14x85mm 1500V)
16	Current Ratting (01,02...40,50A)

Current Ratting	Reference No. for Fuse Link Voltage Grade and Size of Fuse Link		
	EKFL10D10	EKFL15D10L	EKFL15D14L
	1000VDC	1500VDC	1500VDC
	10x38mm	10x85mm	14x85mm
1A	EKFL10D1001		
2A	EKFL10D1002	EKFL15D10L02	
3A	EKFL10D1003	EKFL15D10L03	
4A	EKFL10D1004	EKFL15D10L04	
5A	EKFL10D1005	EKFL15D10L05	
6A	EKFL10D1006	EKFL15D10L06	
8A	EKFL10D1008	EKFL15D10L08	EKFL15D14L08
10A	EKFL10D1010	EKFL15D10L10	EKFL15D14L10
12A	EKFL10D1012	EKFL15D10L12	EKFL15D14L12
15A	EKFL10D1015	EKFL15D10L15	EKFL15D14L15
16A	EKFL10D1016	EKFL15D10L16	EKFL15D14L16
20A	EKFL10D1020	EKFL15D10L20	EKFL15D14L20
25A	EKFL10D1025	EKFL15D10L25	EKFL15D14L25
30A	EKFL10D1030	EKFL15D10L30	EKFL15D14L30
32A	EKFL10D1032	EKFL15D10L32	EKFL15D14L32
35A			EKFL15D14L35
40A			EKFL15D14L40
45A			EKFL15D14L45
50A			EKFL15D14L50

Overall and Installation Dimension(mm)

EKF1-10(X)PV-10

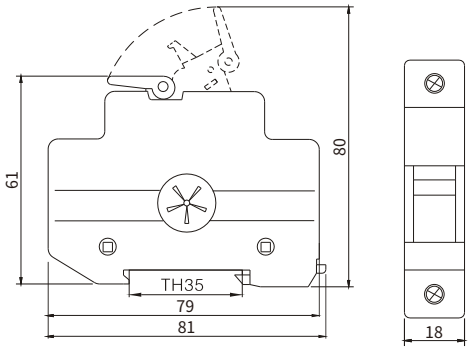

EKF1-10(X)PVH-10

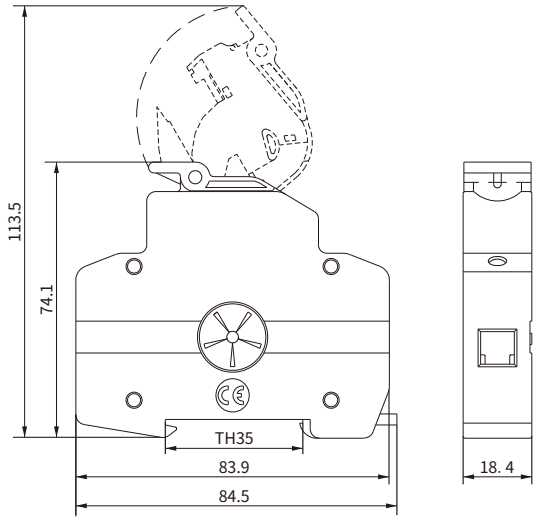

EKF1-15PV-10L/EKF1-15PV-14L

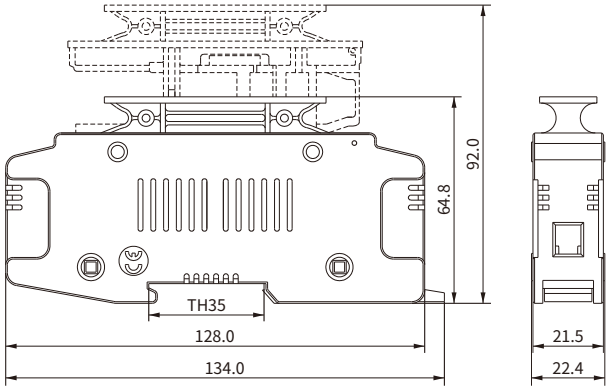

EKFL10D10

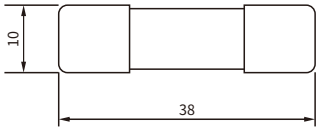

EKFL15D10L

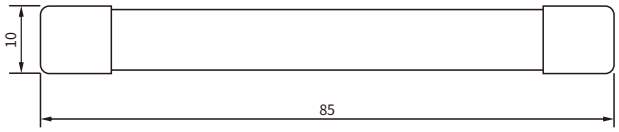

EKFL15D14L

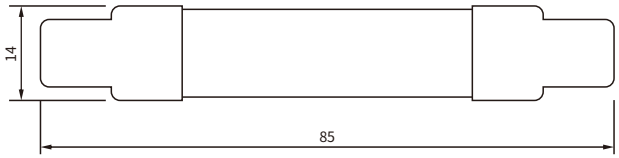

EKD6-DB32

Enclosure DC Isolator

Standard_ IEC60947-3

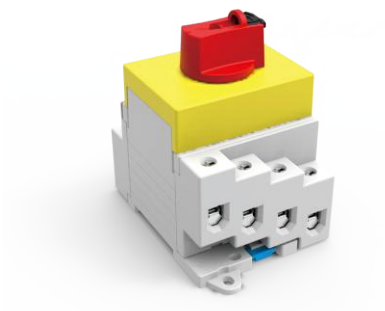

Description

- Parallel wiring, larger aperture, much easier wiring.
- Suitable for distribution box module with lock installation.
- Arc extinction time less than 3ms.
- Modular design. 2 poles & 4poles optional.
- Comply with IEC60947-3(ed.3.2):2015,DC-PV1standard.

Technical Data

Data according to IEC60947-3(ed.3.2):2015,GB14048.3. Utilization category DC-PV1/DC-PV2								Series	No.of Strings	Part Number	Contact Configuration
500V	600V	700V	800V	900V	1000V	1200V	1500V				
32	32	32	32	23	16	13	7	2	1	EKD6-DB32-2	
58	58	58	45	23	16	13	7	4	1	EKD6-DB32-2H	
32	32	32	32	23	16	13	7	4	2	EKD6-DB32-4	
32	32	32	32	32	32	32	23	4	1	EKD6-DB32-4S	
32	32	32	32	32	32	32	23	4	1	EKD6-DB32-4B	
32	32	32	32	32	32	32	23	4	1	EKD6-DB32-4T	

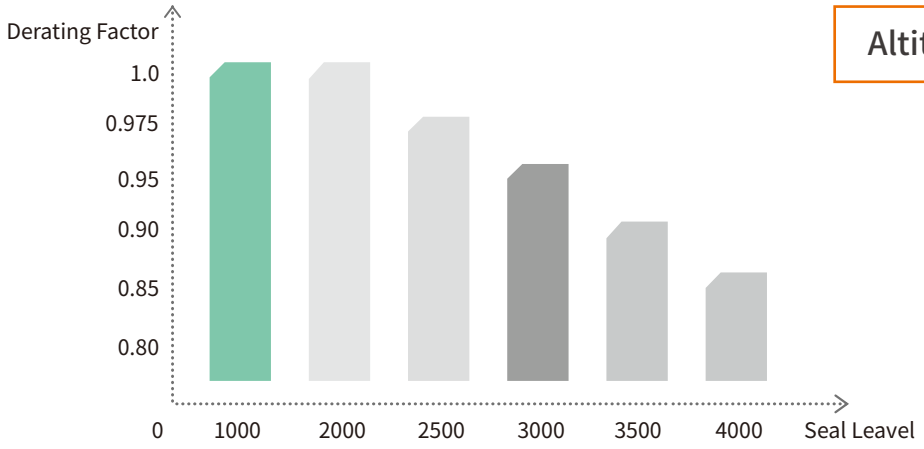

Altitude Derating Curve

Technical Data

Data according to IEC60947-3(ed.3.2):2015,UL508i,GB14048.3. Utilization category DC-PV1 / DC-PV2.

Main Parameters			DB32	
Rated insulation voltage	U_i	V	1500	
Rated thermal current	I_{the}	A	32	
Rated impulse withstand voltage	U_{imp}	V	8000	
Rated short-circuit making capacity	I_{cm}	A	2H	1700
			2, 4	1000
			2H	1700
Rated conditional short-circuit current	I_{cc}	A	5000	
Max. fuse size	g_L(gG)	A	80	
Maximum cable cross sections (incl. jumper)				
Solid or standard		mm^2	4-16	
Flexible		mm^2	4-10	
Flexible (+ multicore cable end)		mm^2	4-10	
Torque				
Tightening torque terminal screws M4.		Nm	1.2-1.8	
Tightening torque knob screws M3		Nm	0.5-0.7	
Switching on or off torque		Nm	0.9-1.3	
General parameters				
Method of mounting			Single Hole Mounting	
Type of knob				
Knob positions			OFF at 9 hr, ON at 12 hr	
Mechanical life			10000	
Number of DC poles			2 or 4	
Operation temperature		°C	-40 to +70	
Storage temperature		°C	-40 to +85	
Pollution degree			2	
Overvoltage category			III	
IP rating of shafte and mounting nut			IP66	

Overall and Installation Dimension(mm)

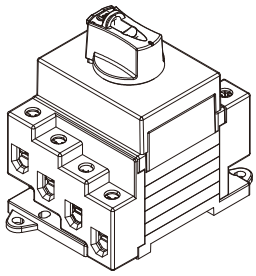

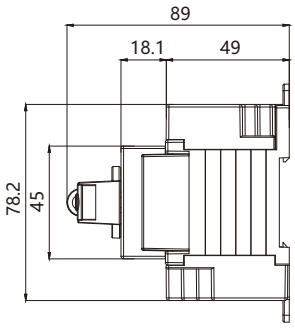

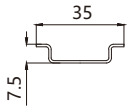

Installation size of switch bottom guide

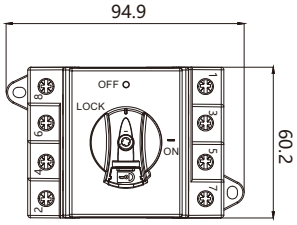

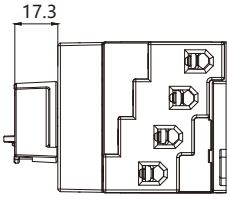

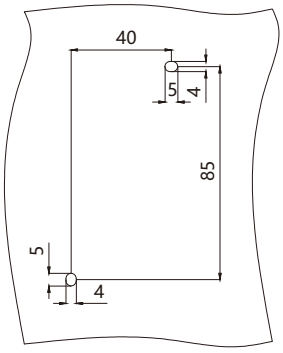

Screw installation size

EKD6-DC32

Enclosure DC Isolator

Standard_ IEC60947-3

Description

- Parallel wiring, larger aperture, much easier wiring.
- Suitable for door lock installation.
- Arc extinction time less than 3ms.
- Modular design. 2 poles & 4poles optional.
- Comply with IEC60947-3(ed.3.2):2015,DC-PV1standard.

Technical Data

Data according to IEC60947-3(ed.3.2):2015,GB14048.3. Utilization category DC-PV1/DC-PV2								Series	No.of Strings	Part Number	Contact Configuration
500V	600V	700V	800V	900V	1000V	1200V	1500V				
32	32	32	32	23	16	13	7	2	1	EKD6-DC32-2	
58	58	58	45	23	16	13	7	4	1	EKD6-DC32-2H	
32	32	32	32	23	16	13	7	4	2	EKD6-DC32-4	
32	32	32	32	32	32	32	23	4	1	EKD6-DC32-4S	
32	32	32	32	32	32	32	23	4	1	EKD6-DC32-4B	
32	32	32	32	32	32	32	23	4	1	EKD6-DC32-4T	

Altitude Derating Curve

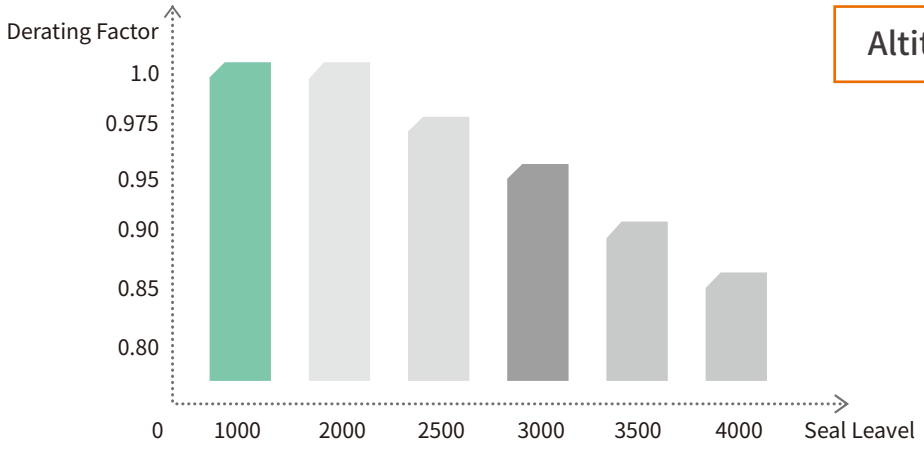

Technical Data

Data according to IEC60947-3(ed.3.2):2015,UL508i,GB14048.3. Utilization category DC-PV1 / DC-PV2.

Main Parameters			DC32	
Rated insulation voltage	U_i	V	1500	
Rated thermal current	I_{the}	A	32	
Rated impulse withstand voltage	U_{imp}	V	8000	
Rated short-circuit making capacity	I_{cm}	A	2H	1700
			2, 4	1000
			2H	1700
Rated conditional short-circuit current	I_{cc}	A	5000	
Max. fuse size	g_L(gG)	A	80	
Maximum cable cross sections (incl. jumper)				
Solid or standard		mm^2	4-16	
Flexible		mm^2	4-10	
Flexible (+ multicore cable end)		mm^2	4-10	
Torque				
Tightening torque terminal screws M4.		Nm	1.2-1.8	
Tightening torque panel mounting screws ST4.2(304 stainless steel)		Nm	0.8-0.9	
Tightening torque knob screws M3		Nm	0.5-0.7	
Switching on or off torque		Nm	0.9-1.3	
General parameters				
Method of mounting			Single Hole Mounting	
Type of knob			B	
Knob positions			OFF at 12 hr, ON at 3 hr	
Mechanical life			10000	
Number of DC poles			2 or 4	
Operation temperature		°C	-40 to +70	
Storage temperature		°C	-40 to +85	
Pollution degree			2	
Overvoltage category			III	
IP rating of shafte and mounting nut			IP66	

Overall and Installation Dimension(mm)

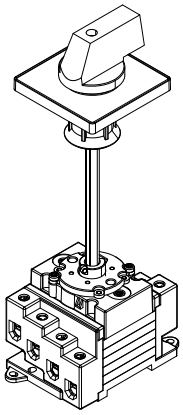

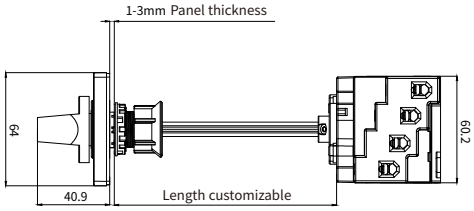

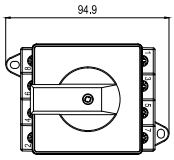

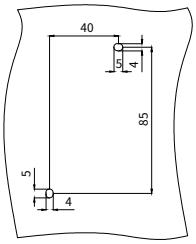

Screw installation size

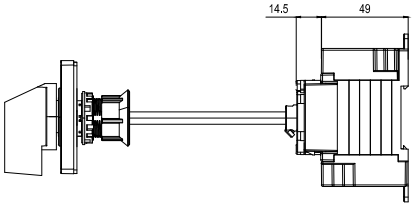

Installation size of switch bottom guide

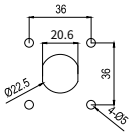

Head panel installation size

EKD6-DC32R

Enclosure DC Isolator

Standard_ IEC60947-3

Description

- Parallel wiring, larger aperture, much easier wiring.
- Suitable for door lock installation.
- Arc extinction time less than 3ms.
- Modular design. 2 poles & 4poles optional.
- The handle locked in "OFF" position.
- Comply with IEC60947-3(ed.3.2):2015,DC-PV1standard.

Technical Data

Data according to IEC60947-3(ed.3.2):2015,GB14048.3. Utilization category DC-PV1/DC-PV2								Series	No.of Strings	Part Number	Contact Configuration
500V	600V	700V	800V	900V	1000V	1200V	1500V				
32	32	32	32	23	16	13	7	2	1	EKD6-DC32R-2	
58	58	58	45	23	16	13	7	4	1	EKD6-DC32R-2H	
32	32	32	32	23	16	13	7	4	2	EKD6-DC32R-4	
32	32	32	32	32	32	32	23	4	1	EKD6-DC32R-4S	
32	32	32	32	32	32	32	23	4	1	EKD6-DC32R-4B	
32	32	32	32	32	32	32	23	4	1	EKD6-DC32R-4T	

Altitude Derating Curve

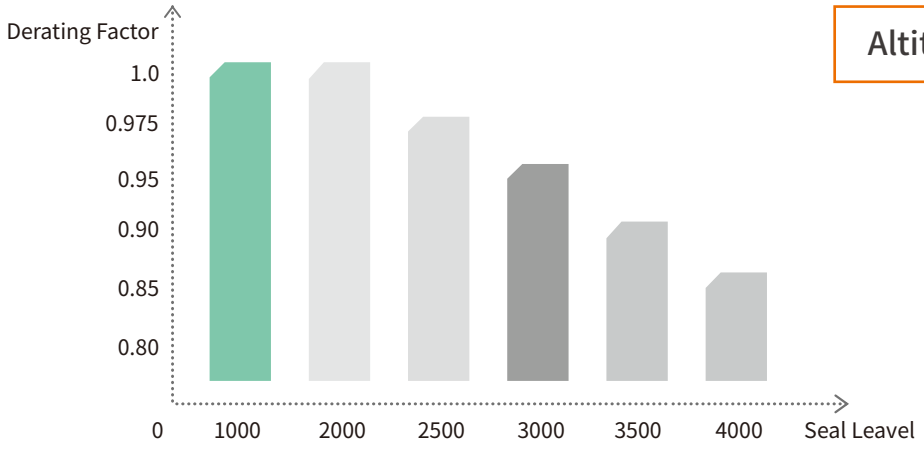

Technical Data

Data according to IEC60947-3(ed.3.2):2015,UL508i,GB14048.3. Utilization category DC-PV1 / DC-PV2.

Main Parameters			DC32R	
Rated insulation voltage	U_i	V	1500	
Rated thermal current	I_{the}	A	32	
Rated impulse withstand voltage	U_{imp}	V	8000	
Rated short-circuit making capacity	I_{cm}	A	2H	1700
			2, 4	1000
			2H	1700
Rated conditional short-circuit current	I_{cc}	A	5000	
Max. fuse size	g_L(gG)	A	80	
Maximum cable cross sections (incl. jumper)				
Solid or standard		mm^2	4-16	
Flexible		mm^2	4-10	
Flexible (+ multicore cable end)		mm^2	4-10	
Torque				
Tightening torque terminal screws M4.		Nm	1.2-1.8	
Tightening torque panel mounting screws ST4.2(304 stainless steel)		Nm	0.8-0.9	
Tightening torque knob screws M3		Nm	0.5-0.7	
Switching on or off torque		Nm	0.9-1.3	
General parameters				
Method of mounting			Single Hole Mounting	
Type of knob			C	
Knob positions			OFF at 12 hr, ON at 3 hr	
Mechanical life			10000	
Number of DC poles			2 or 4	
Operation temperature		°C	-40 to +70	
Storage temperature		°C	-40 to +85	
Pollution degree			2	
Overvoltage category			III	
IP rating of shafte and mounting nut			IP66	

Overall and Installation Dimension(mm)

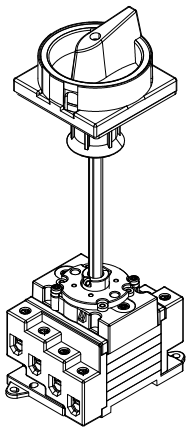

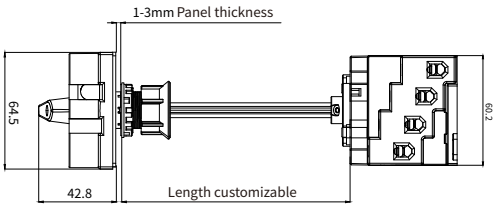

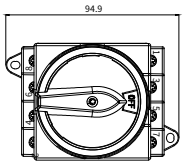

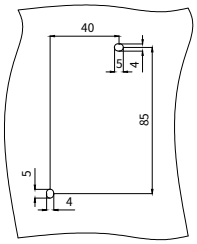

Screw installation size

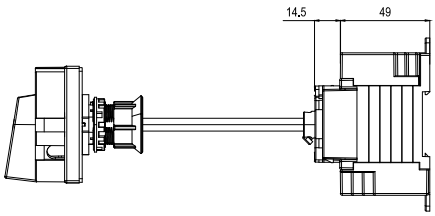

Installation size of switch bottom guide

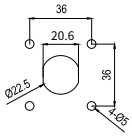

Head panel installation size

EKD6-PM32

Enclosure DC Isolator

Standard_ IEC60947-3

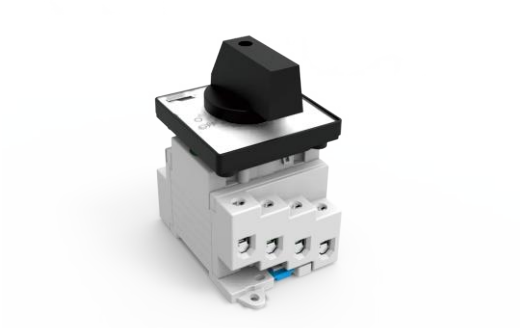

Description

- Parallel wiring, larger aperture, much easier wiring.
- Suitable for panel mounting.
- Arc extinction time less than 3ms.
- Modular design. 2 poles & 4poles optional.
- Comply with IEC60947-3(ed.3.2):2015,DC-PV1standard.

Technical Data

Data according to IEC60947-3(ed.3.2):2015,GB14048.3. Utilization category DC-PV1/DC-PV2								Series	No.of Strings	Part Number	Contact Configuration
500V	600V	700V	800V	900V	1000V	1200V	1500V				
32	32	32	32	23	16	13	7	2	1	EKD6-PM32-2	
58	58	58	45	23	16	13	7	4	1	EKD6-PM32-2H	
32	32	32	32	23	16	13	7	4	2	EKD6-PM32-4	
32	32	32	32	32	32	32	23	4	1	EKD6-PM32-4S	
32	32	32	32	32	32	32	23	4	1	EKD6-PM32-4B	
32	32	32	32	32	32	32	23	4	1	EKD6-PM32-4T	

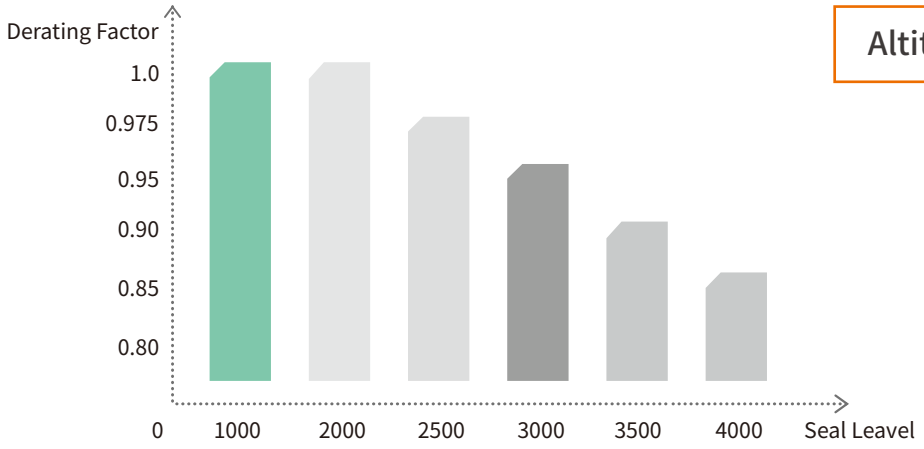

Altitude Derating Curve

Technical Data

Data according to IEC60947-3(ed.3.2):2015,UL508i,GB14048.3. Utilization category DC-PV1 / DC-PV2.

Main Parameters			PM32	
Rated insulation voltage	U_i	V	1500	
Rated thermal current	I_{the}	A	32	
Rated impulse withstand voltage	U_{imp}	V	8000	
Rated short-circuit making capacity	I_{cm}	A	2H	1700
			2, 4	1000
			2H	1700
Rated conditional short-circuit current	I_{cc}	A	5000	
Max. fuse size	g_L(gG)	A	80	
Maximum cable cross sections (incl. jumper)				
Solid or standard		mm^2	4-16	
Flexible		mm^2	4-10	
Flexible (+ multicore cable end)		mm^2	4-10	
Torque				
Tightening torque terminal screws M4.		Nm	1.2-1.8	
Tightening torque panel mounting screws ST4.2(304 stainless steel)		Nm	0.8-0.9	
Tightening torque knob screws M3		Nm	0.5-0.7	
Switching on or off torque		Nm	0.9-1.3	
General parameters				
Method of mounting			Single Hole Mounting	
Type of knob			B	
Knob positions			OFF at 12 hr, ON at 3 hr	
Mechanical life			10000	
Number of DC poles			2 or 4	
Operation temperature		°C	-40 to +70	
Storage temperature		°C	-40 to +85	
Pollution degree			2	
Overvoltage category			III	
IP rating of shafte and mounting nut			IP66	

Overall and Installation Dimension(mm)

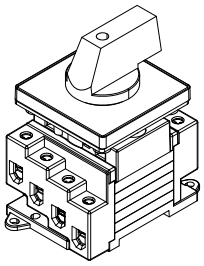

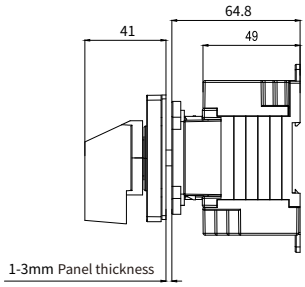

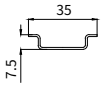

Installation size of switch bottom guide

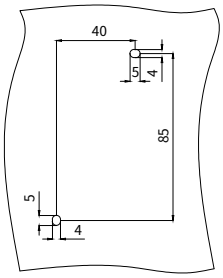

Screw installation size

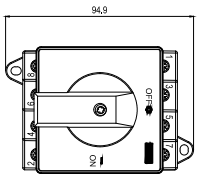

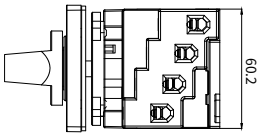

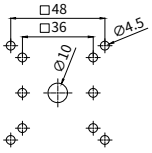

Head panel installation size

The three installation methods in the figure:
A:4 hole, center distance 48 (no gasket)
B:4 hole, center distance 36 (4 hole gasket)
C:2 hole, center distance 36 (2 hole gasket)

EKD6-PM32R

Enclosure DC Isolator

Standard_ IEC60947-3

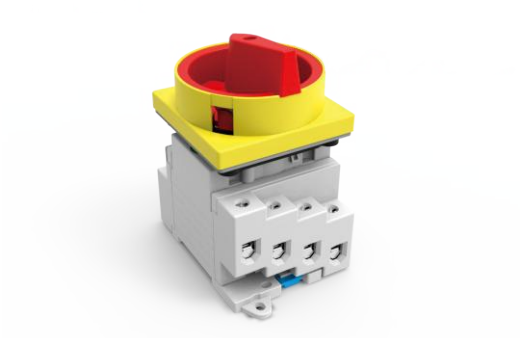

Description

- Parallel wiring, larger aperture, much easier wiring.
- Suitable for panel mounting.
- Arc extinction time less than 3ms.
- Modular design. 2 poles & 4poles optional.
- The handle locked in "OFF" position.
- Comply with IEC60947-3(ed.3.2):2015,DC-PV1standard.

Technical Data

Data according to IEC60947-3(ed.3.2):2015,GB14048.3. Utilization category DC-PV1/DC-PV2								Series	No.of Strings	Part Number	Contact Configuration
500V	600V	700V	800V	900V	1000V	1200V	1500V				
32	32	32	32	23	16	13	7	2	1	EKD6-PM32R-2	
58	58	58	45	23	16	13	7	4	1	EKD6-PM32R-2H	
32	32	32	32	23	16	13	7	4	2	EKD6-PM32R-4	
32	32	32	32	32	32	32	23	4	1	EKD6-PM32R-4S	
32	32	32	32	32	32	32	23	4	1	EKD6-PM32R-4B	
32	32	32	32	32	32	32	23	4	1	EKD6-PM32R-4T	

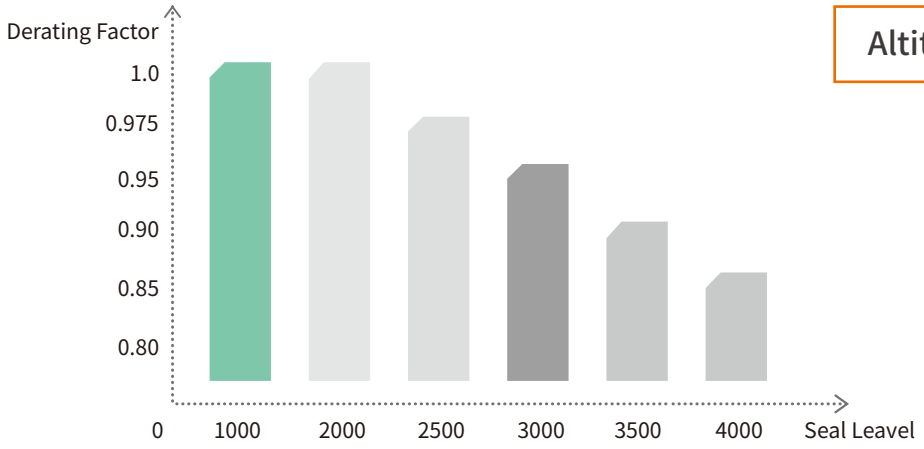

Altitude Derating Curve

Technical Data

Data according to IEC60947-3(ed.3.2):2015,UL508i,GB14048.3. Utilization category DC-PV1 / DC-PV2.

Main Parameters			PM32R	
Rated insulation voltage	U_i	V	1500	
Rated thermal current	I_{the}	A	32	
Rated impulse withstand voltage	U_{imp}	V	8000	
Rated short-circuit making capacity	I_{cm}	A	2H	1700
			2, 4	1000
			2H	1700
Rated conditional short-circuit current	I_{cc}	A	5000	
Max. fuse size	g_L(gG)	A	80	
Maximum cable cross sections (incl. jumper)				
Solid or standard		mm^2	4-16	
Flexible		mm^2	4-10	
Flexible (+ multicore cable end)		mm^2	4-10	
Torque				
Tightening torque terminal screws M4.		Nm	1.2-1.8	
Tightening torque panel mounting screws ST4.2(304 stainless steel)		Nm	0.8-0.9	
Tightening torque knob screws M3		Nm	0.5-0.7	
Switching on or off torque		Nm	0.9-1.3	
General parameters				
Method of mounting			Single Hole Mounting	
Type of knob			C	
Knob positions			OFF at 12 hr, ON at 3 hr	
Mechanical life			10000	
Number of DC poles			2 or 4	
Operation temperature		°C	-40 to +70	
Storage temperature		°C	-40 to +85	
Pollution degree			2	
Overvoltage category			III	
IP rating of shafte and mounting nut			IP66	

Overall and Installation Dimension(mm)

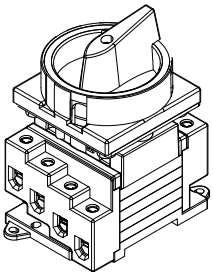

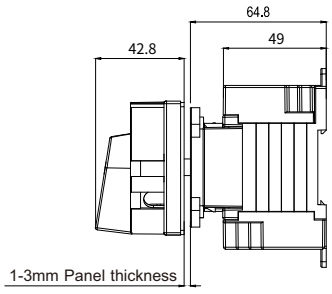

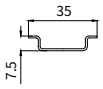

Installation size of switch bottom guide

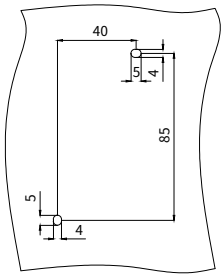

Screw installation size

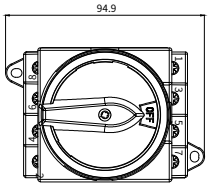

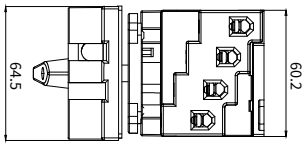

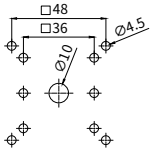

Head panel installation size

The three installation methods in the figure:
A:4 hole, center distance 48 (no gasket)
B:4 hole, center distance 36 (4 hole gasket)
C:2 hole, center distance 36 (2 hole gasket)

EKD6-EL32R

Enclosure DC Isolator

Standard_ IEC60947-3

Description

IP66 box-type design:

- Screw fixing doesn't interfere with the sealing performance;
- Multiple mechanical seals around the shaft guarantee the reliability of a waterproof and moisture-proof design;
- Stainless steel rotary screw does not rust nor damp;
- Standard cable interface available with seal rings;
- Internal sealing in top and bottom covers, combined with 2 screws, guarantee an IP66 protection degree;

SAFE-LOCK with three rotational positions, reducing the risk of tampering.

The isolator is compatible with various cables: M25, M20, M16, and M12, and with optional waterproof cable joints and MC4 joints.

Characteristics of the integration inside the on/of switch:

- Compact structure, with optional 2 or 4 DC poles;
- Incorporating a user independent switching action, spring mechanism, to ensure a very fast break/make action, ensuring that the disconnection of the load circuits and suppression of the arc normally occurs within 5ms.
- Self-cleaning contact mechanism, reducing power loss and abrasion, improving the conduction performance, reducing the resistance and energy loss of the switch, extending the on-off lifecycle.
- Double arc extinguishing mechanism, magnetic and arc chutes, restrain the arc eficiency, especially DC arcs.

Technical Data

Data according to IEC60947-3(ed.3.2):2015,GB14048.3. Utilization category DC-PV1/DC-PV2								Series	No.of Strings	Part Number	Contact Configuration
500V	600V	700V	800V	900V	1000V	1200V	1500V				
32	32	32	32	23	16	13	7	2	1	EKD6-EL32R-2	
58	58	58	45	23	16	13	7	4	1	EKD6-EL32R-2H	
32	32	32	32	23	16	13	7	4	2	EKD6-EL32R-4	
32	32	32	32	32	32	32	23	4	1	EKD6-EL32R-4S	
32	32	32	32	32	32	32	23	4	1	EKD6-EL32R-4B	
32	32	32	32	32	32	32	23	4	1	EKD6-EL32R-4T	

Technical Data

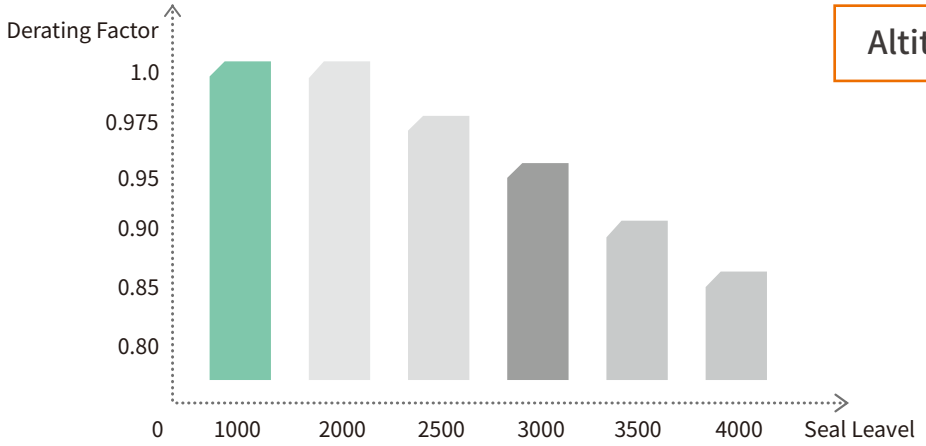

Data according to IEC60947-3(ed.3.2):2015,UL508i,GB14048.3. Utilization category DC-PV1 / DC-PV2.

Main Parameters			EL32R	
Rated insulation voltage	U_i	V	1500	
Rated thermal current	I_{the}	A	32	
Rated impulse withstand voltage	U_{imp}	V	8000	
Rated short-circuit making capacity	I_{cm}	A	2H	1700
			2, 4	1000
Rated conditional short-circuit current	I_{cc}	A	5000	
Max. fuse size	g_L(gG)	A	80	
Maximum cable cross sections (incl. jumper)				
Solid or standard		mm^2	4-16	
Flexible		mm^2	4-10	
Flexible (+ multicore cable end)		mm^2	4-10	
Torque				
Tightening torque terminal screws M4.		Nm	1.2-1.8	
Tightening torque panel mounting screws ST4.2(304 stainless steel)		Nm	1.5-2.0	
Tightening torque knob screws M3		Nm	0.5-0.7	
Switching on or off torque		Nm	0.9-1.3	
General parameters				
Method of mounting			Wall-mounted or screw installation	
Type of knob			C	
Knob positions			OFF at 9 hr, ON at 12 hr	
Mechanical life			10000	
Number of DC poles			2 or 4	
Distance of contacts (per pole)			8	
Operation temperature		°C	-40 to +70	
Storage temperature		°C	-40 to +85	
Pollution degree			2	
Overvoltage category			III	
IP rating of shafte and mounting nut			IP66	

Types	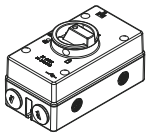	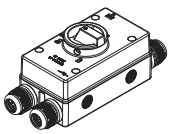	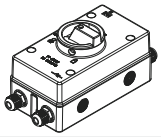	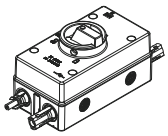	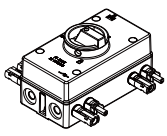
Specs	M25 Waterproof Cap	Cable Gland M25	Cable Gland M16	2MC4/H4(Optional)	4MC4/H4(Optional)
Independent Strings	1 or 2	1 or 2	1	1	1
Recommend Types	ALL	ALL	2/2H/4S/4T/4B	2/2H/4S/4T/4B	4

Overall and Installation Dimension(mm)

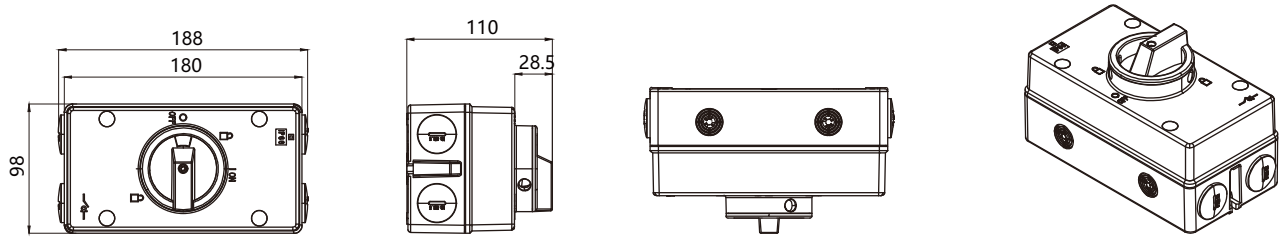

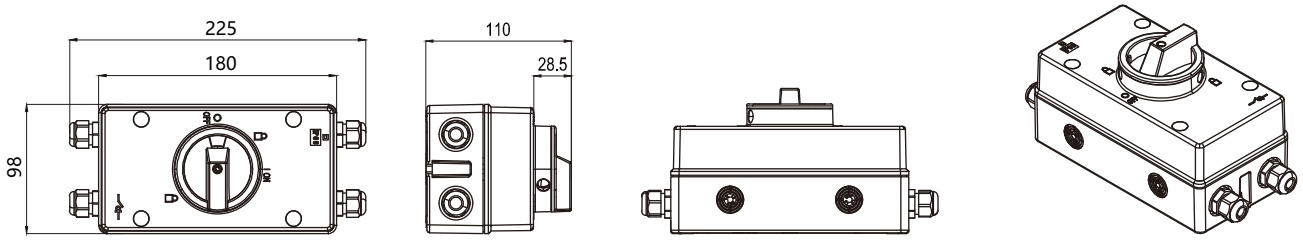

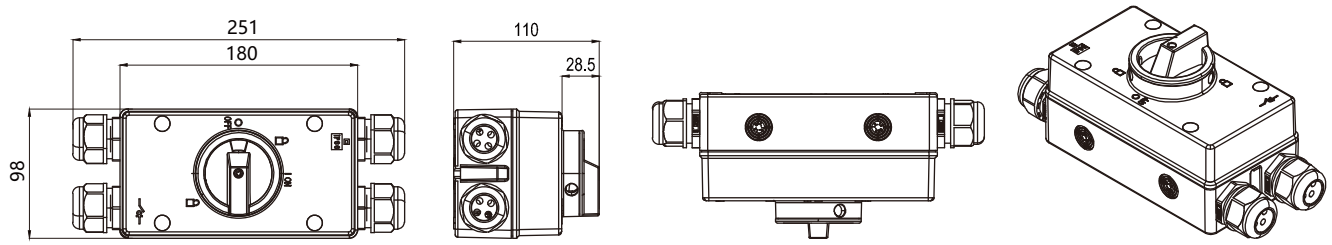

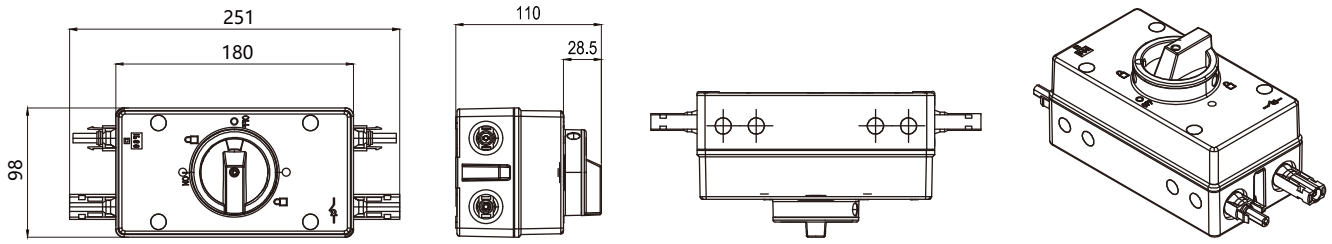

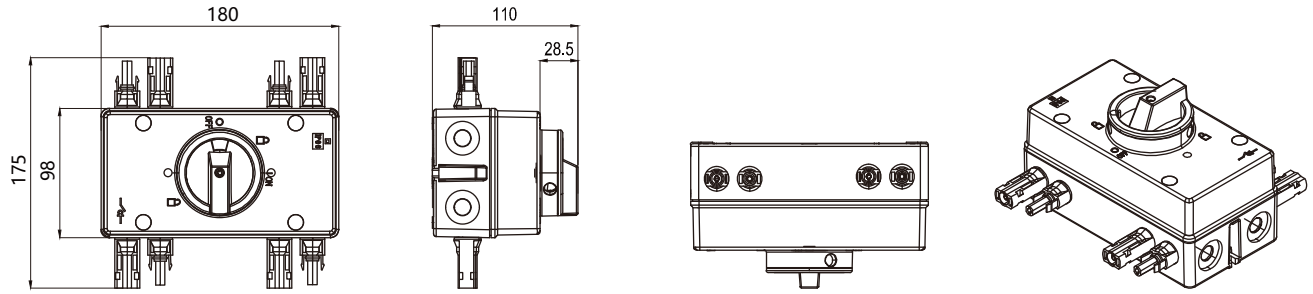

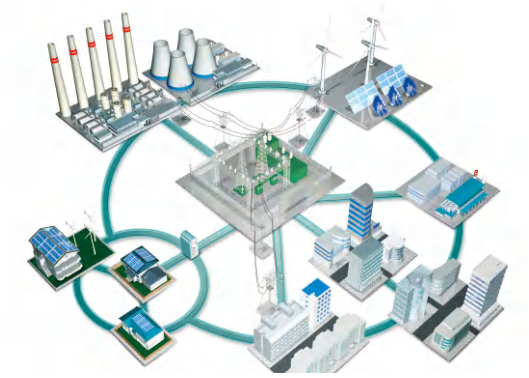

Description

Features

- Finger-safe fuse holders
- IP65 Box with Policarbonate material with Anti UV
- 5 Years warranty standard

Options

- AC switch off, DC will switch off Automatically(optional)
- 1~36 strings boxes available
- 1500V components available
- Customizable Upon Request

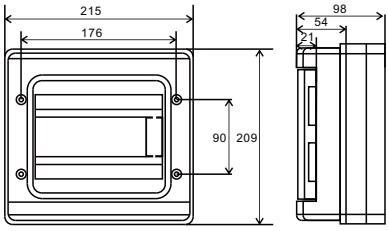

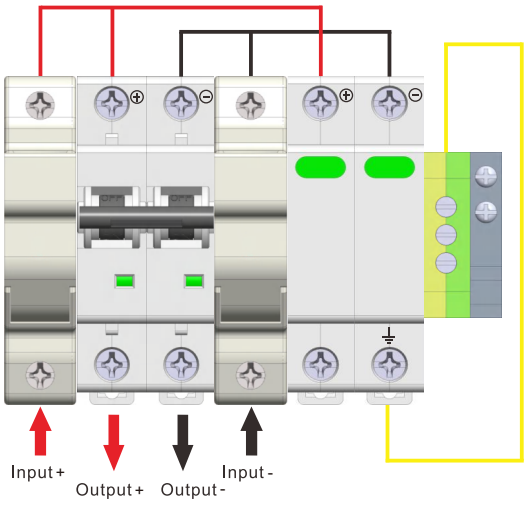

1 String Input 1 String Output DC 500V

Type	EKDB-PV1/1-500-M	Quantity
Enclosurer of Box	HA-8 ways	1
DC SPD	EKU5-T2-40PV-2M600	1
DC MCB	EKM1-63DC-216 2P 500VDC	1
DC Fuse with Link	EKF1-10XPVH-10-1P 15A 1000V	2

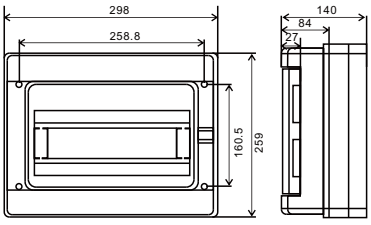

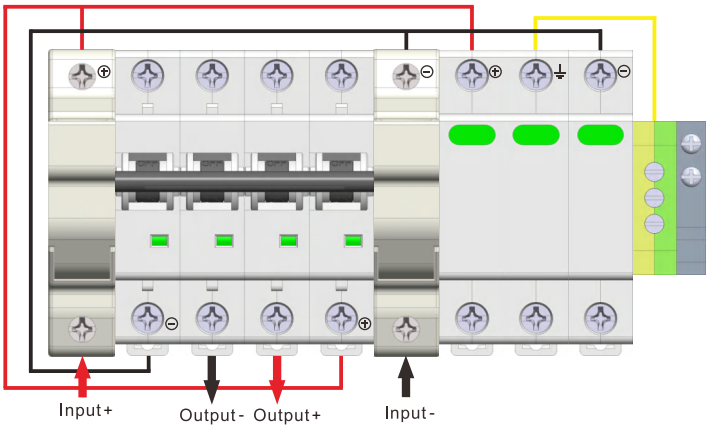

1 String Input 1 String Output DC 1000V

Type	EKDB-PV1/1-1000-M	Quantity
Enclosurer of Box	HA-12 ways	1
DC SPD	EKU5-T2-40PV-3M1000	1
DC MCB	EKM1-63DC-416 4P 1000VDC	1
DC Fuse with Link	EKF1-10XPVH-10-1P 15A 1000V	2

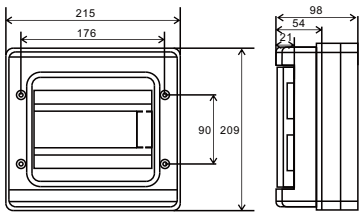

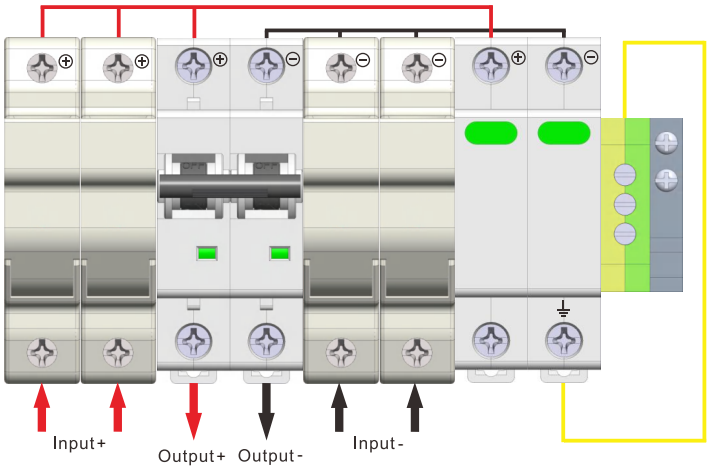

2 String Input 1 String Output DC 500V

Type	EKDB-PV2/1-500-M	Quantity
Enclosurer of Box	HA-8 ways	1
DC SPD	EKU5-T2-40PV-2M600	1
DC MCB	EKM1-63DC-232 2P 500VDC	1
DC Fuse with Link	EKF1-10XPVH-10-1P 15A 1000V	4

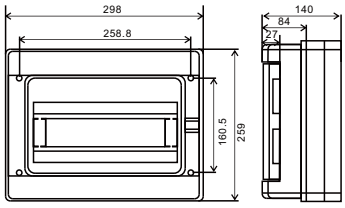

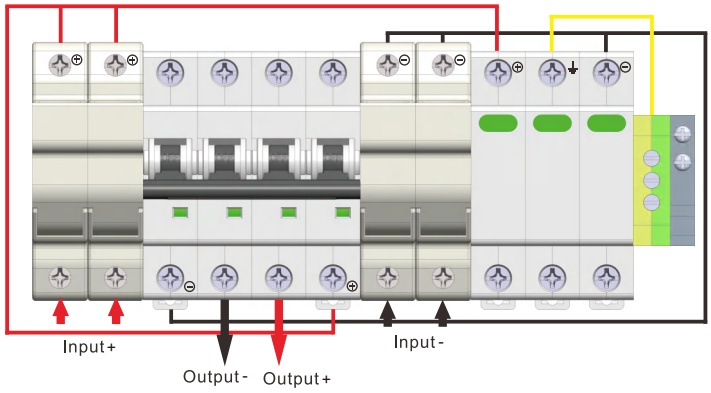

2 String Input 1 String Output DC 1000V

Type	EKDB-PV2/1-1000-M	Quantity
Enclosurer of Box	HA-12 ways	1
DC SPD	EKU5-T2-40PV-3M1000	1
DC MCB	EKM1-63DC-432 4P 1000VDC	1
DC Fuse with Link	EKF1-10XPVH-10-1P 15A 1000V	4

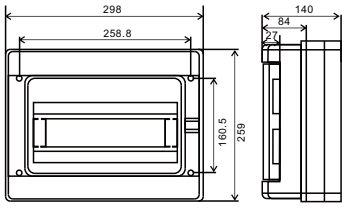

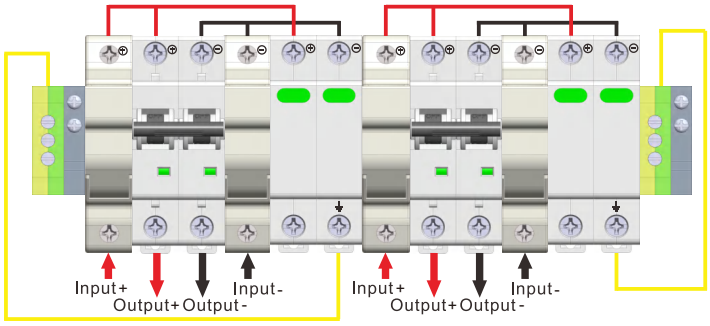

2 String Input 2 String Output DC 500V

Type	EKDB-PV2/2-500-M	Quantity
Enclosurer of Box	HA-12 ways	1
DC SPD	EKU5-T2-40PV-2M600	2
DC MCB	EKM1-63DC-216 2P 500VDC	2
DC Fuse with Link	EKF1-10XPVH-10-1P 15A 1000V	4

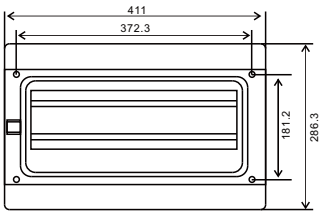

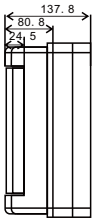

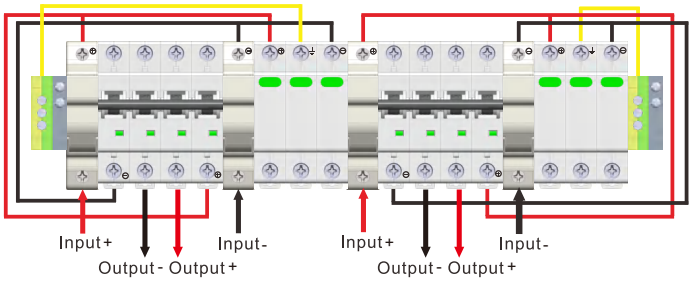

2 String Input 2 String Output DC 1000V

Type	EKDB-PV2/2-1000-M	Quantity
Enclosurer of Box	HA-18 ways	1
DC SPD	EKU5-T2-40PV-3M1000	2
DC MCB	EKM1-63DC-416 4P 1000VDC	2
DC Fuse with Link	EKF1-10XPVH-10-1P 15A 1000V	4

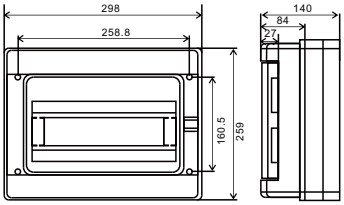

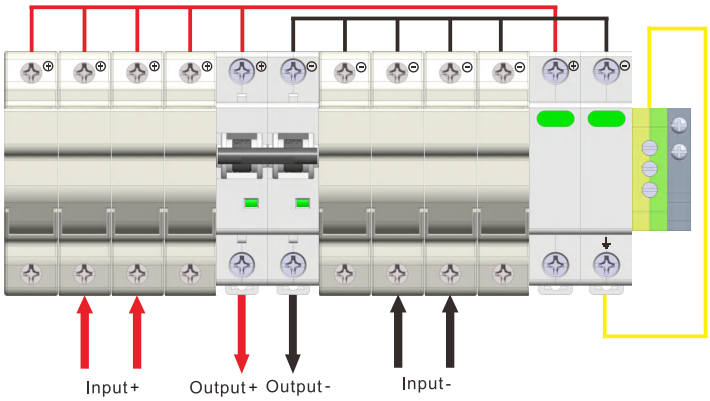

4 String Input 1 String Output DC 500V

Type	EKDB-PV4/1-500-M	Quantity
Enclosurer of Box	HA-12 ways	1
DC SPD	EKU5-T2-40PV-2M600	1
DC MCB	EKM1-63DC-263 2P 500VDC	1
DC Fuse with Link	EKF1-10XPVH-10-1P 15A 1000V	8

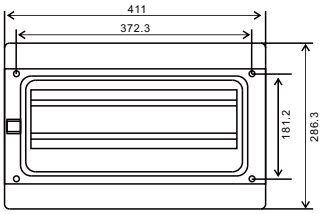

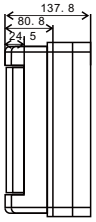

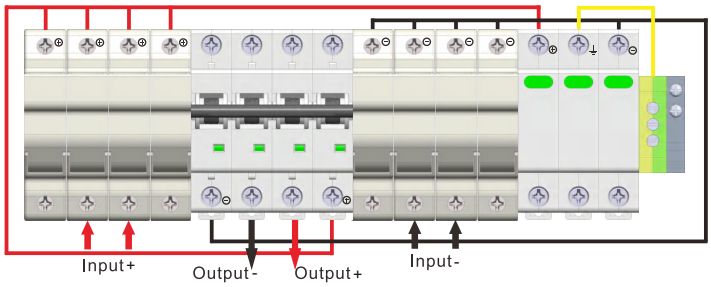

4 String Input 1 String Output DC 1000V

Type	EKDB-PV4/1-1000-M	Quantity
Enclosurer of Box	HA-18 ways	1
DC SPD	EKU5-T2-40PV-3M1000	1
DC MCB	EKM1-63DC-463 4P 1000VDC	1
DC Fuse with Link	EKF1-10XPVH-10-1P 15A 1000V	8

Combiner Box

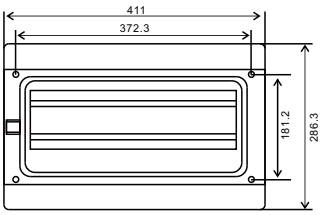

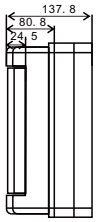

4 String Input 2 String Output DC 500V

Type	EKDB-PV4/2-500-M	Quantity
Enclosurer of Box	HA-18 ways	1
DC SPD	EKU5-T2-40PV-2M600	2
DC MCB	EKM1-63DC-232 2P 500VDC	2
DC Fuse with Link	EKF1-10XPVH-10-1P 15A 1000V	8

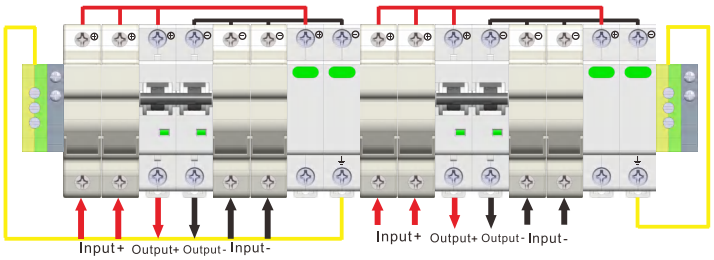

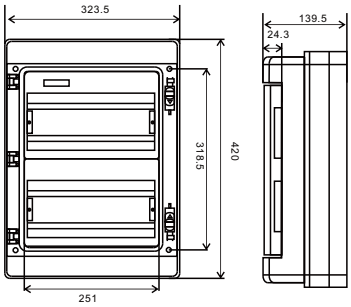

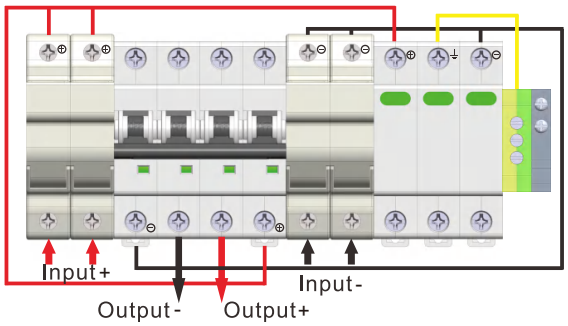

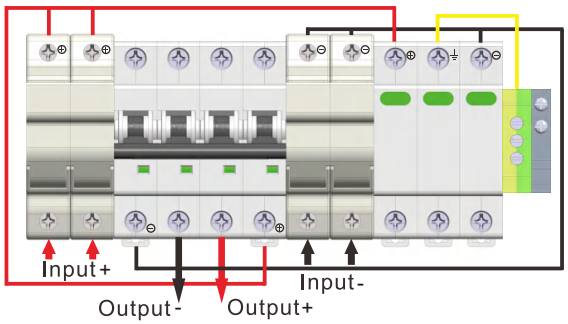

4 String Input 2 String Output DC 1000V

Type	EKDB-PV4/2-1000-M	Quantity
Enclosurer of Box	HA-26 ways	1
DC SPD	EKU5-T2-40PV-3M1000	2
DC MCB	EKM1-63DC-432 4P 1000VDC	2
DC Fuse with Link	EKF1-10XPVH-10-1P 15A 1000V	8

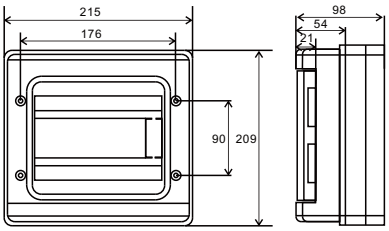

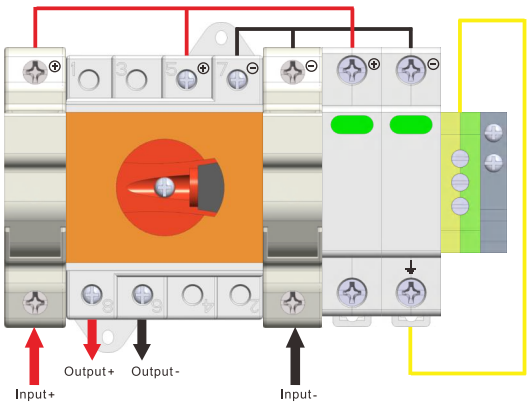

1 String Input 1 String Output DC 600V

Type	EKDB-PV1/1-600-I	Quantity
Enclosurer of Box	HA-8 ways	1
DC SPD	EKU5-T2-40PV-2M600	1
DC Isolator	EKD6-DB32-2	1
DC Fuse with Link	EKF1-10XPVH-10-1P 15A 1000V	2

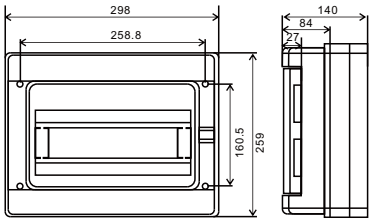

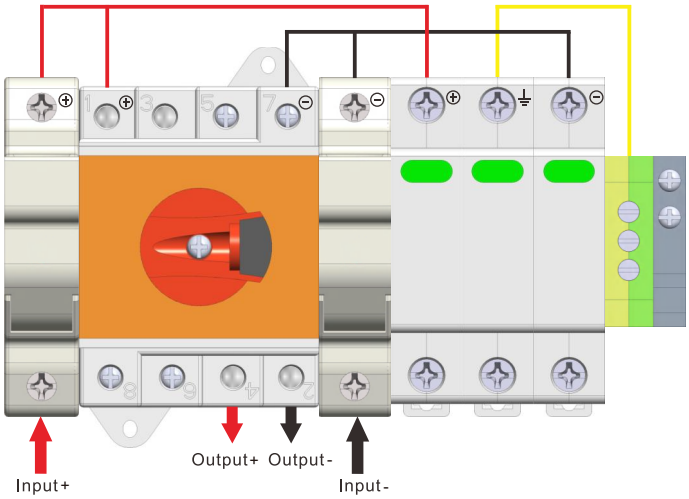

1 String Input 1 String Output DC 1000V

Type	EKDB-PV1/1-1000-I	Quantity
Enclosurer of Box	HA-12 ways	1
DC SPD	EKU5-T2-40PV-3M1000	1
DC Isolator	EKD6-DB32-4S	1
DC Fuse with Link	EKF1-10XPVH-10-1P 15A 1000V	2

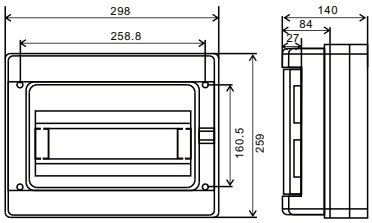

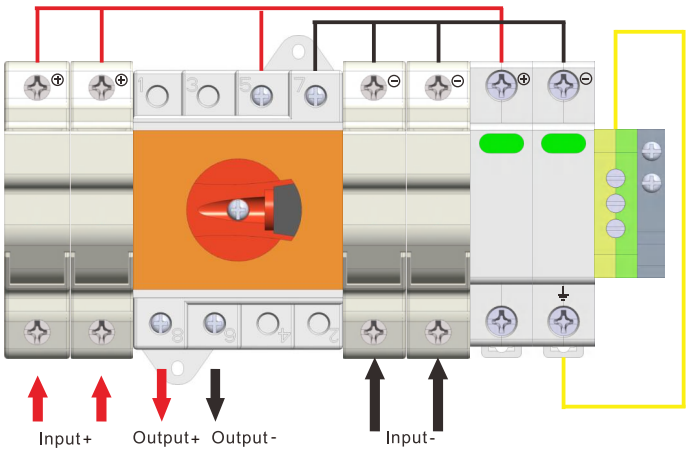

2 String Input 1 String Output DC 600V

Type	EKDB-PV2/1-600-I	Quantity
Enclosurer of Box	HA-12 ways	1
DC SPD	EKU5-T2-40PV-2M600	1
DC Isolator	EKD6-DB32-2	1
DC Fuse with Link	EKF1-10XPVH-10-1P 15A 1000V	4

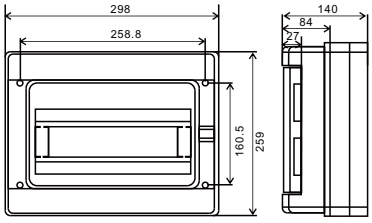

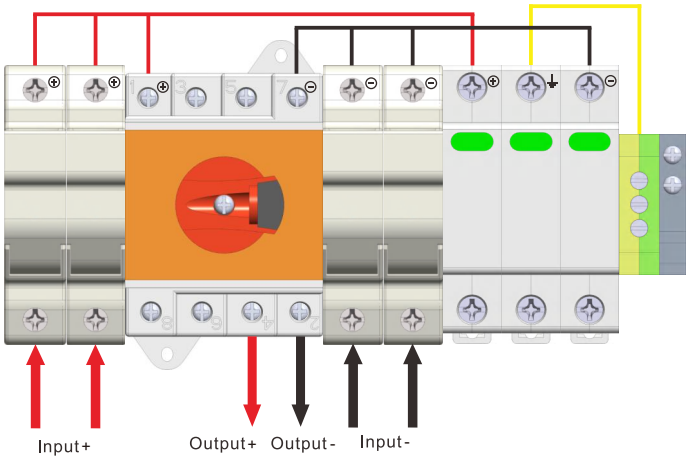

2 String Input 1 String Output DC 1000V

Type	EKDB-PV2/1-1000-I	Quantity
Enclosurer of Box	HA-12 ways	1
DC SPD	EKU5-T2-40PV-3M1000	1
DC Isolator	EKD6-DB32-4S	1
DC Fuse with Link	EKF1-10XPVH-10-1P 15A 1000V	4

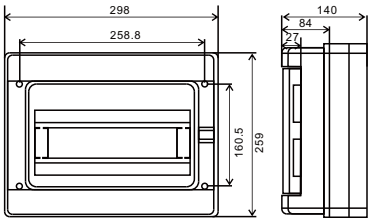

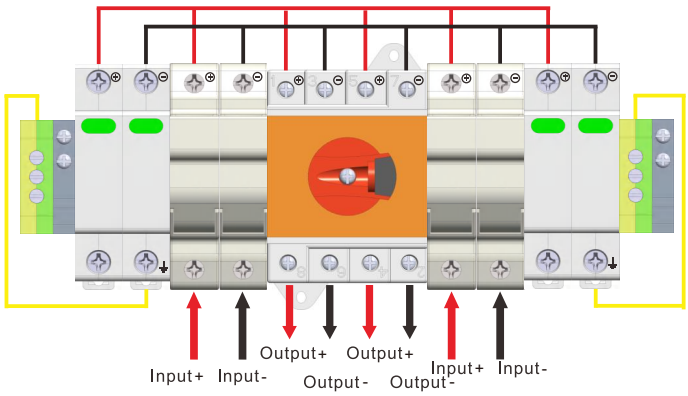

2 String Input 2 String Output DC 600V

Type	EKDB-PV2/2-600-I	Quantity
Enclosurer of Box	HA-12 ways	1
DC SPD	EKU5-T2-40PV-2M600	2
DC Isolator	EKD6-DB32-4	1
DC Fuse with Link	EKF1-10XPVH-10-1P 15A 1000V	4

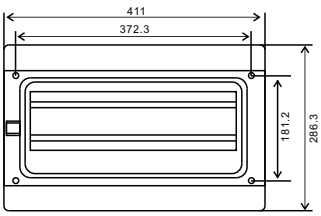

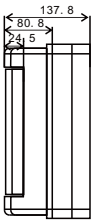

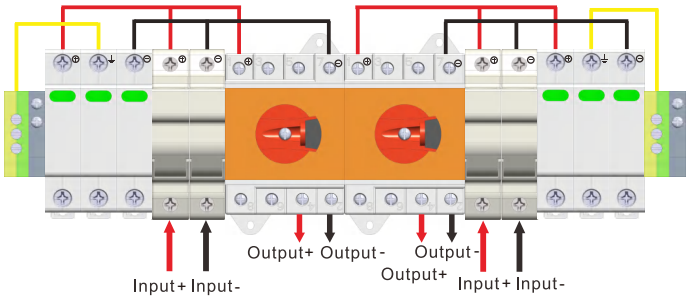

2 String Input 2 String Output DC 1000V

Type	EKDB-PV2/2-1000-I	Quantity
Enclosurer of Box	HA-18 ways	1
DC SPD	EKU5-T2-40PV-3M1000	2
DC Isolator	EKD6-DB32-4S	2
DC Fuse with Link	EKF1-10XPVH-10-1P 15A 1000V	4

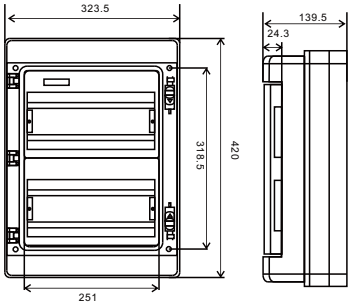

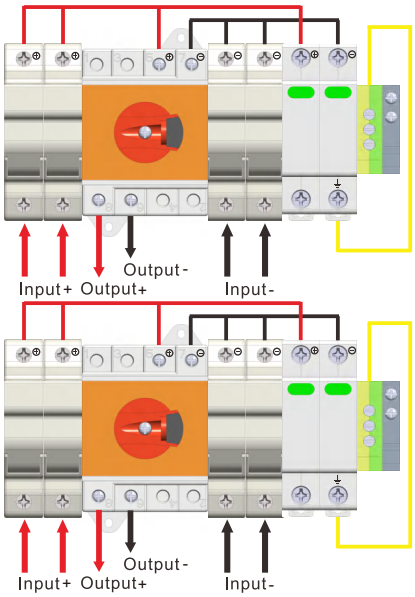

4 String Input 2 String Output DC 600V

Type	EKDB-PV4/2-600-I	Quantity
Enclosurer of Box	HA-26 ways	1
DC SPD	EKU5-T2-40PV-2M600	2
DC Isolator	EKD6-DB32-2	2
DC Fuse with Link	EKF1-10XPVH-10-1P 15A 1000V	8

Combiner Box

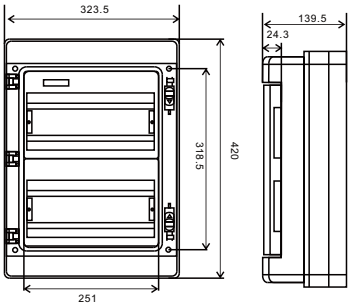

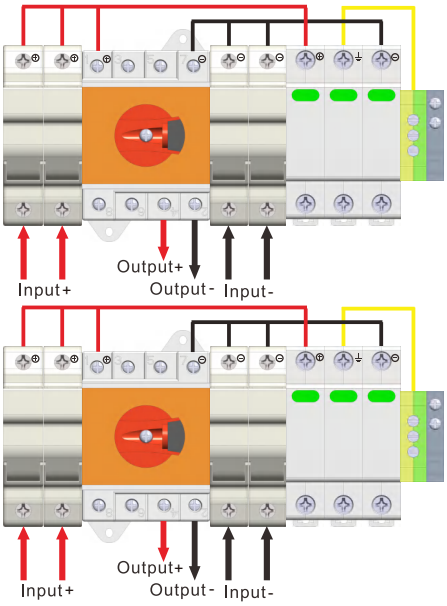

4 String Input 2 String Output DC 1000V

Type	EKDB-PV4/2-1000-I	Quantity
Enclosurer of Box	HA-26 ways	1
DC SPD	EKU5-T2-40PV-3M1000	2
DC Isolator	EKD6-DB32-4S	2
DC Fuse with Link	EKF1-10XPVH-10-1P 15A 1000V	8

Description

ETEK wall-mounted injection molding sealed box series products are made of impact-resistant polycarbonate PC or ABS material injection molding, and its air tightness can be applied to harsh and harsh industrial environments, protection, etc. The class can reach IP65; the cabinet can be equipped with related accessories, which can be easily installed horizontally or vertically as required. The front panel (inside door) can also be installed. The bottom panel can be made of plastic or metal. This product can be widely used in photovoltaic solar energy , Petrochemical steel mines, subway tunnels and other areas with harsh environments.

Model meaning of FRP plastic sealed box

EKDB3 G P – 60 50 22 H

- H: Horizontal Z: Vertical
- High: D*10
- Width: W*10
- Length: L*10
- P: PC A: ABS
- Cover color G: gray T: transparent
- ETEK Plastic Box

Main Technical Data

Model No.		Dimension(mm)					
		Length	width	height	Available depth	Base plate installation	Wall installation
PC	ABS	L	W	D	C	B×A	E×S
EKDB3G(T)P-605022H	EKDB3G(T)A-605022H	600	500	220	148	560×460	560×515
EKDB3G(T)P-605022Z	EKDB3G(T)A-605022Z	600	500	220	148	560×460	615×460
EKDB3G(T)P-604022H	EKDB3G(T)A-604022H	600	400	220	148	560×360	560×415
EKDB3G(T)P-604022Z	EKDB3G(T)A-604022Z	600	400	220	148	560×360	615×360
EKDB3G(T)P-504020H	EKDB3G(T)A-504020H	500	400	200	128	460×360	460×415
EKDB3G(T)P-504020Z	EKDB3G(T)A-504020Z	500	400	200	128	460×360	515×360
EKDB3G(T)P-403017H	EKDB3G(T)A-403017H	400	300	170	109	360×260	360×315
EKDB3G(T)P-403017Z	EKDB3G(T)A-403017Z	400	300	170	109	360×260	415×260
EKDB3G(T)P-3030170	EKDB3G(T)A-3030170	300	300	170	109	260×260	315×260
EKDB3G(T)P-302017H	EKDB3G(T)A-302017H	300	200	170	109	260×160	260×215
EKDB3G(T)P-302017Z	EKDB3G(T)A-302017Z	300	200	170	109	260×160	315×160

L	outer height
W	outer width
Z	outer depth
C	available depth
B	bottom plate installation
A	base plate installation
E	wall installation
S	wall installation

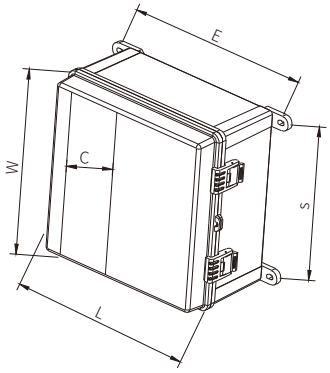

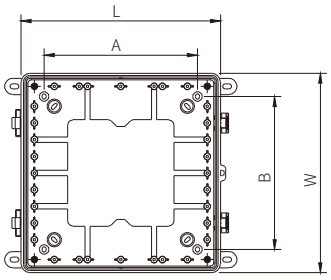

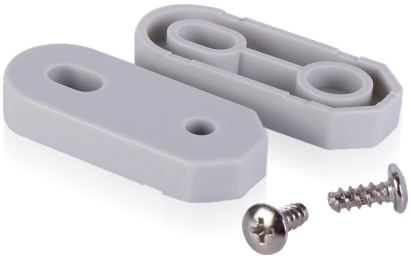

Applicable accessories

Name
Plastic box mounting feet

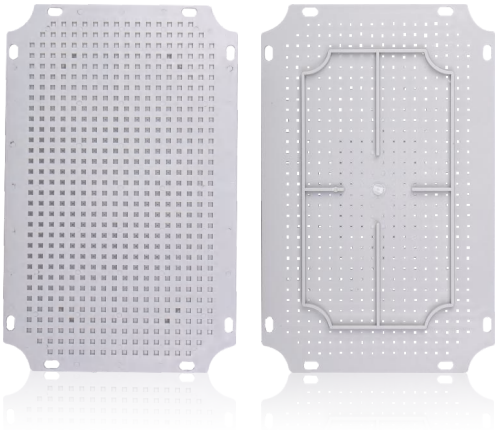

Name
Plastic box with plastic bottom plate suitable for 300×200×170
Plastic box with plastic bottom plate suitable for 300×300×170
Plastic box with plastic bottom plate suitable for 400×300×170
Plastic box with plastic bottom plate suitable for 500×400×200
Plastic box with plastic bottom plate suitable for 600×400×220
Plastic box with plastic bottom plate suitable for 600×500×220

Name
Galvanized plate bottom plate of plastic box is suitable for 300×200×170
Galvanized plate bottom plate of plastic box is suitable for 300×300×170
Galvanized plate bottom plate of plastic box is suitable for 400×300×170
Galvanized plate bottom plate of plastic box is suitable for 500×400×200
Galvanized plate bottom plate of plastic box is suitable for 600×400×220
Galvanized plate bottom plate of plastic box is suitable for 600×500×220

Applicable accessories

Name
Plastic box plastic inner door suitable for 300×200×170
Plastic box plastic inner door suitable for 300×300×170
Plastic box plastic inner door suitable for 400×300×170
Plastic box plastic inner door suitable for 500×400×200
Plastic box plastic inner door suitable for 600×400×220
Plastic box plastic inner door suitable for 600×500×220

Name
Plastic box galvanized plate inner door suitable for 300×200×170
Plastic box galvanized plate inner door suitable for 300×300×170
Plastic box galvanized plate inner door suitable for 400×300×170
Plastic box galvanized plate inner door suitable for 500×400×200
Plastic box galvanized plate inner door suitable for 600×400×220
Plastic box galvanized plate inner door suitable for 600×500×220

EKDB4

Distribution Box ---------- Standard_ IEC62208

Description

The Distribution Box is used for Terminal power distributing system	
The Distribution Box are completed with Din-rail 35mm and Neutral Terminal (Selectable)	
Electrical Rating	100A/single phase,63A/three phase,240/415V AC 50/60Hz
Protection Degree	IP65
Material	Shell: ABS
	Door: Transparent PC
Mothod of Installation	Surface-Mounted

Type of open door from right to left

Without Neutral Terminal Model

Model No.		Ways	Dimension(mm)		
PC	Code		L	W	H
EKDB4P4R	604241	4	100	221	94
EKDB4P6R	604242	6	201	230	114
EKDB4P8R	604243	8	237	230	114
EKDB4P12R	604245	12	308	230	114
EKDB4P18R	604246	18	417	230	114
EKDB4P24R	604247	24	309	391	114

With Neutral Terminal Model

Model No.		Ways	Dimension(mm)		
PC	Code		L	W	H
EKDB4P4RT	604211	4	100	221	94
EKDB4P6RT	604212	6	201	230	114
EKDB4P8RT	604213	8	237	230	114
EKDB4P12RT	604215	12	308	230	114
EKDB4P18RT	604216	18	417	230	114
EKDB4P24RT	604217	24	309	391	114

Overall and Installation Dimension(mm)

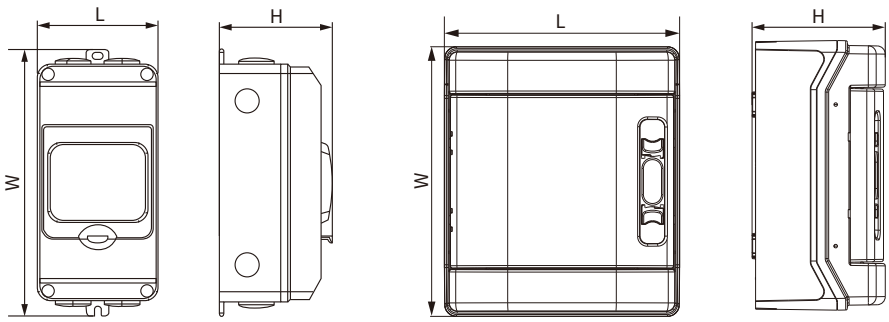

2 Ways

EKDB5

Plastic Sealed Box

Description

In the photovoltaic industry, the proportion of EKDB5 combiner boxes used in photovoltaic equipment in developed countries in Europe and the United States has reached 53%, while the proportion in China is only 16%. And just two years ago this ratio was still Less than 5%. Because combiner boxes are used in harsh environments such as outdoors, they have very high core requirements on the corrosion resistance, service life, impact resistance, weather resistance, and protection level of the components in the box. Compared with the metal box, the corrosion resistance of the EKDB5 box is twice that of the metal, and the service life is 2 to 3 times that of the metal. The impact resistance and weather resistance are both higher than the metal box, and the protection level is 22 times higher than that of the metal box. %, IPKIS has more innovatively customized silicone sealing strips, with a protection level of IP67, which is a must-select product for water photovoltaic projects. Therefore, at present, domestic photovoltaic manufacturers have begun to develop and use combiner boxes based on EKDB5 engineering plastics. It is believed that within a few years, they can keep up or exceed the proportion of metal boxes.

After several years of concentrated practice, with the courage to be the first in the world, after full market research, the first generation launched the unique 930×730×260 and 730×580×260 two specifications and four uses, and invested the whole process production equipment in the company. The production and processing has attracted the attention and praise of the industry; now the second generation 933×733×260 and 733×733×260 products have been launched soon, and the submarine trademark has been registered as a special brand for plastic protective sealed boxes to meet the increasing needs of customers.

Model meaning of FRP plastic sealed box

EKDB5 - 93 73 26 H

- H: Horizontal Z: Vertical
- High: D*10
- Width: W*10
- Length: L*10
- EKDB5: First generation
  EKDB5N: Second generation

EKDB5

Plastic Sealed Box

Main Technical Data

Model No.	Dimension(mm)					
	Length	width	height	Available depth	Base plate installation	Wall installation
(Material)EKDB5	L	W	D	C	B×A	E×S
EKDB5-937326H	930	730	260	230	816×620	816×701
EKDB5-937326Z	930	730	260	230	816×620	897×620
EKDB5-735826H	730	580	260	230	621×470	621×551
EKDB5-735826Z	730	580	260	230	621×470	702×470
EKDB5N-937326H	933	733	260	230	790×590	790×672
EKDB5N-737326	733	733	260	230	590×590	672×590

L	outer height
W	outer width
Z	outer depth
C	available depth
B	bottom plate installation
A	base plate installation
E	wall installation
S	wall installation

EKDB5

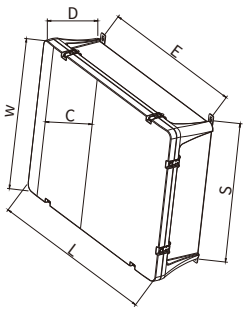

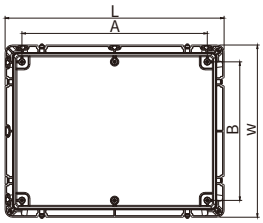

EKDB5N

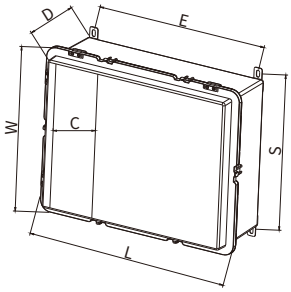

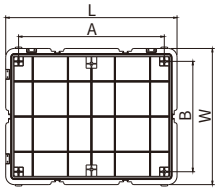

Applicable accessories

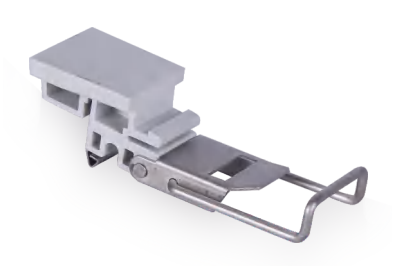

Name
EKDB5N box 304 stainless steel buckle

Name
EKDB5N box 304 stainless steel padlock

Name
EKDB5N box 304 stainless steel hinge

Name
EKDB5N box 737326 mounting base plate
EKDB5N box 937326 mounting base plate

Applicable accessories

Name
EKDB5 box 304 stainless steel buckle

Name
EKDB5 box 304 stainless steel hinge

Name
EKDB5 box 304 stainless steel padlock

Name
EKDB5 box 304 stainless steel mounting feet

Name
EKDB5 box 735826 bottom plate
EKDB5 box 937326 bottom plate

Waterproof Cable Gland

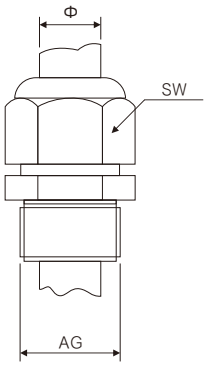

Technical Parameters

Material	UL approved nylon PA66, nitrile rubber
Thread Specifications	Metric, PG, G, NPT
Operating temperature	Static -40°C ~ 100°C, instantaneous heat to 120°C, dynamic -20°C ~ 80°C, instantaneous heat to 100°C
Features	Special clamping claws and rubber parts design, clamping range, especially tensile strength, waterproof, dustproof, salt, acid, alcohol, grease and common solvents
Color Category	Black, gray, special colors (white, red, blue, dark gray) can be customized
Protection class	IP68

Specifications Model

Model	Thread size (mm)	Hole size AG(mm)	Thread length (mm)	Wall thickness (mm)	Applicable cable Φ(mm)	Wrench size SW(mm)
PG7	12.5	Φ12.6-13	9	3	3.5-7	18/16
PG9	15.2	Φ15.3-15.5	9	3	4-9	22/19
PG11	18.6	Φ18.7-19	9	3	5-11	24/22
PG13.5	20.4	Φ20.5-21	9	4	6-12	27/24
PG16	22.5	Φ22.6-23	10	5	10-14	30/27
PG19	24	Φ24.2-24.5	10	5	12-15	30/28
PG21	28.3	Φ28.5-29	12	5	13-18	36/33
PG25	30	Φ30.2-30.5	12	6	16-21	37/35
PG29	37	Φ37.2-37.5	12	6	18-25	45/42
PG36	47	Φ47.3-48	17	7	22-32	58/52
PG42	54	Φ54.5-55	19	7	32-39	65/60
PG48	59.3	Φ60-61	19	7	37-44	70/69
PG63	71	Φ71.5-72	27	19	42-51	83/75

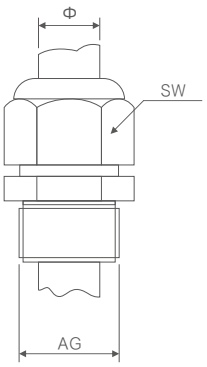

Technical Parameters

Material	UL approved nylon PA66, nitrile rubber
Thread Specifications	Metric, PG, G, NPT
Operating temperature	Static -40°C ~ 100°C, instantaneous heat to 120°C, dynamic -20°C ~ 80°C, instantaneous heat to 100°C
Features	Special clamping claws and rubber parts design, clamping range, especially tensile strength, waterproof, dustproof, salt, acid, alcohol, grease and common solvents
Color Category	Black, gray, special colors (white, red, blue, dark gray) can be customized
Protection class	IP68

Specifications Model

Model	Thread size (mm)	Hole size AG(mm)	Thread length (mm)	Wall thickness (mm)	Applicable cable Φ(mm)	Wrench size SW(mm)
M12	M12×1.5	Φ12.2-12.5	9	3	3-7	18/16
M16	M16×1.5	Φ16.2-16.5	9	3	4-8	22/19
M18	M18×1.5	Φ18.2-18.5	9	3	5-10	24/22
M20	M20×1.5	Φ20.2-20.5	9	5	6-12	27/24
M22	M22×1.5	Φ22.2-22.5	10	5	10-14	30/27
M24	M24×1.5	Φ24.2-24.5	10	5	12-15	33/28
M25	M25×1.5	Φ25.2-25.5	10	5	13-15	33/28
M25	M25×1.5	Φ25.2-25.5	12	5	13-18	33/30
M27	M27×1.5	Φ27.2-27.5	12	5	13-18	35/33
M30	M30×1.5	Φ30.2-30.5	12	6	16-21	37/37
M32	M32×1.5	Φ32.2-32.5	12	6	16-21	39/35
M36	M36×1.5	Φ36.2-37	12	6	18-25	45/42
M40	M40×1.5	Φ40.2-41	17	7	20-26	52/52
M50	M50×1.5	Φ50.5-51	19	10	32-39	60/60
M63	M63×1.5	Φ63.5-64	19	10	37-44	74/69
M72	M72×1.5	Φ72.5-73	27	15	42-52	83/77

PV-LTM4(1000V)/PV-LTM4-1(1000V)

Solar Connector ---------- Standard_ IEC60068-2-52

Technical Data

Connector system	Φ2.5mm~6mm
Rated voltage	1000V DC(IEC)[1]
Rated current	17A(1.5mm²) 22A(2.5mm²; 14AWG) 30A(4mm²; 6mm²; 12AWG, 10AWG)
Test voltage	6kV(50HZ,1min.)
Ambient temperature range	-40°C... +90°C(IEC) -40°C... +75°C(UL)
Upper limiting temper ature	+105°C(IEC)
Degree of protection, mated	IP67
unmated	IP2X
Comtact resistanceof plug connectors	0.5mΩ
Safetyclass	II
Contact material	Messing, verzinnt Copper Alloy, tin plated
Insulation material	PC/PPO
Locking system	Snap-in
Flame class	UL-94-V0
Salt mist spray test, degree of severity 5	IEC 60068-2-52

Overall and Installation Dimension(mm)

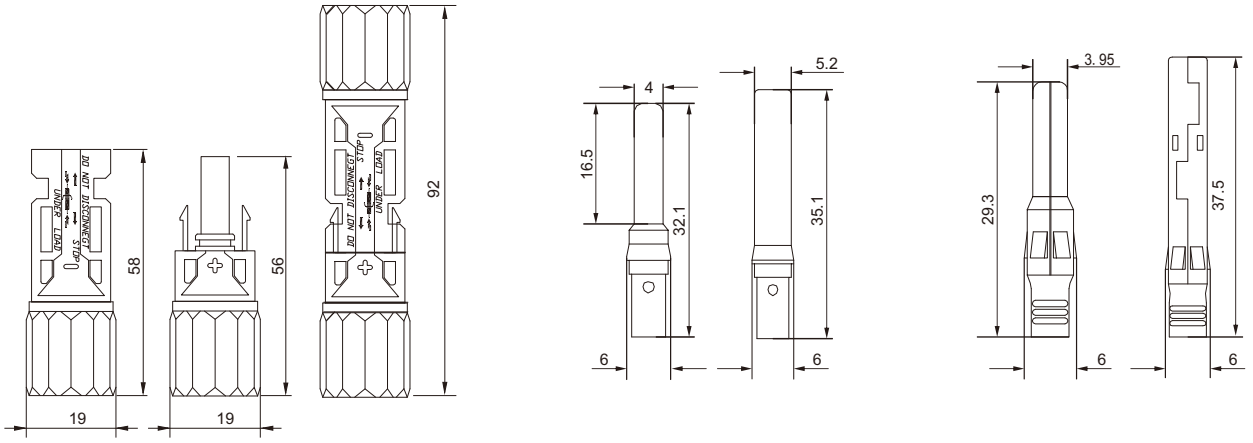

PV-LTM01(1000V)/PV-LTM01-1(1000V)

Solar Connector ---------- Standard_ IEC60068-2-52

Technical Data

Connector system	Φ2.5mm~6mm
Rated voltage	1000V DC(IEC)[1]
Rated current	17A(1.5mm²) 22A(2.5mm²; 14AWG) 30A(4mm²; 6mm²; 12AWG, 10AWG)
Test voltage	6kV(50HZ,1min.)
Ambient temperature range	-40°C... +90°C(IEC) -40°C... +75°C(UL)
Upper limiting temper ature	+105°C(IEC)
Degree of protection, mated	IP67
unmated	IP2X
Comtact resistanceof plug connectors	0.5mΩ
Safetyclass	II
Contact material	Messing, verzinnt Copper Alloy, tin plated
Insulation material	PC/PPO
Locking system	Snap-in
Flame class	UL-94-V0
Salt mist spray test, degree of severity 5	IEC 60068-2-52

Overall and Installation Dimension(mm)

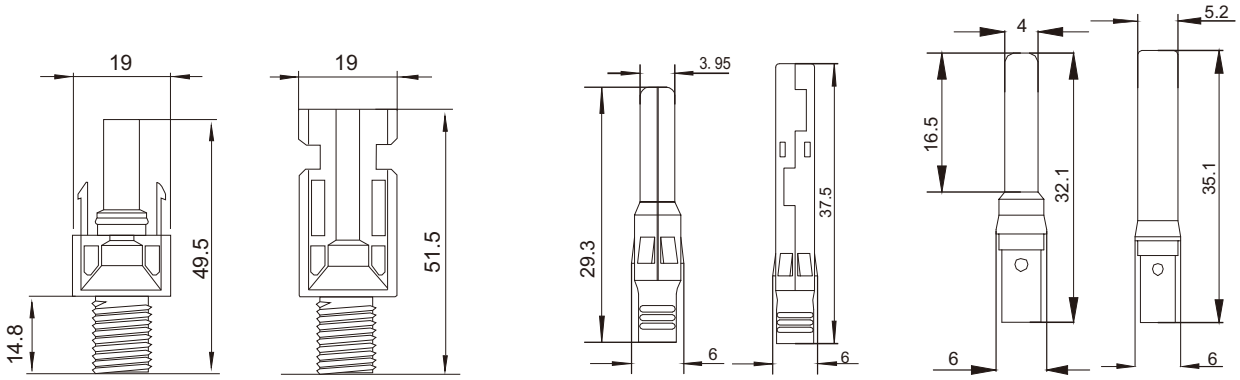

Tel-
0086-577-62780116

Fax-
0086-577-62774090

Email-
info@etek-china.com

No. 288 Wei 17th Road,
Economic Development Zone,
Yueqing City Zhejiang China.

ETEK®
ETEK ELECTRIC

ZHEJIANG ETEK
ELECTRICAL TECHNOLOGY CO.,LTD.